Table of Contents

ABC Body Quick Reference (Aluminum Body Corp.)	4
A. M. Haire Quick Reference	8
American Commercial Quick Reference (America's Body Company.)	14
Babb Quick Reference	19
Continental Quick Reference	25
Delta FZ/Gindy/Vanco Quick Reference	29
Duralite Quick Reference	39
Grumman Quick Reference	45
Grumman V-Body Quick Reference	55
Jannell Quick Reference	60
Kidron Quick Reference	64
Marathon/Metro/Satellite Quick Reference	73
Mickey Quick Reference	78
Modern Wagon Quick Reference	84
Morgan Quick Reference	88
Supreme Quick Reference	106
Supreme Signature Series Quick Reference	121
U.S. Truck Body Quick Reference	125
Utilimaster Quick Reference	135
Top Rails	145
Bottom Rails	154
Rub Rails & End Caps	160
Posts	163
Connectors	170
Roof Bows	173

Table of Contents (Continued)

Aluminum Castings	179
Aluminum Extrusions	204
Radius Posts & Panels	231
Steel Parts	240
Fiberglass Caps	257
Roll Up Doors & Parts	263
Rubber Dock Bumpers, Door Bumpers & Wheel Chocks	272
Hardware & Fasteners	283
Bumpers	284
Miscellaneous	297
Flooring	322
Ramps & Parts	324
Lights, Mirrors, Reflectors, Light Boxes	330
Lift Gate Parts	337
Tools & Equipment	341
Index	344

General Information

The VIN number of a vehicle contains a code digit at the tenth place that identifies the year of manufacture.

xxxxxxxxxXxxxxxxx

B=1981	L=1990	X=1999	8=2008
C=1982	M=1991	Y=2000	9=2009
D=1983	N=1992	1=2001	A=2010
E=1984	P=1993	2=2002	B=2011
F=1985	R=1994	3=2003	C=2012
G=1986	S=1995	4=2004	D=2013
H=1987	T=1996	5=2005	E=2014
J=1988	V=1997	6=2006	F=2015
K=1989	W=1998	7=2007	G=2016

ABC
Body Parts
Quick
Reference
Guide

(Aluminum Body Corp.)

Notes:

Aluminum Body Corporation

DISCLAIMER

USE OF OEM OR MANUFACTURERS' NAME AND/OR PART NUMBERS IS FOR IDENTIFICATION PURPOSES AND SIMPLIFICATION ONLY AND IN NO WAY IS MEANT TO IMPLY THAT FLEET PARTS' ITEMS ARE AUTHORIZED OR IN ANY WAY AFFILIATED WITH THOSE MANUFACTURERS.

Part 077020- ABC Body Connector

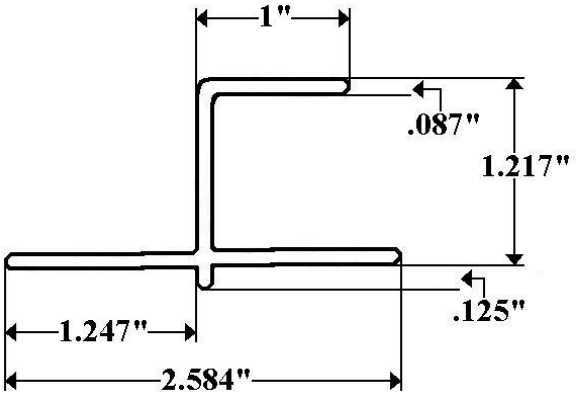

Part 2010S (96”) & 2010S/108 (108”)– ABC Stainless Corner Radius

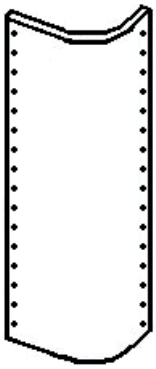

11-3/4” Wide *Punched 4” Centers*

Part 7701- ABC Body Upper Top Rail

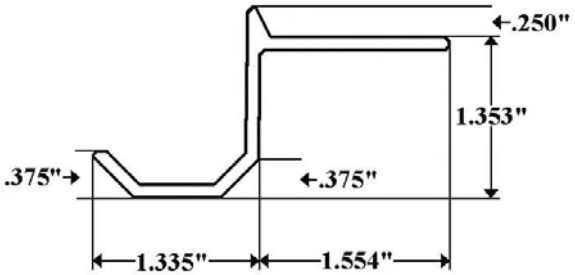

Use #7702 for Lower Top Rail

Part 7702- ABC Body Lower Top Rail

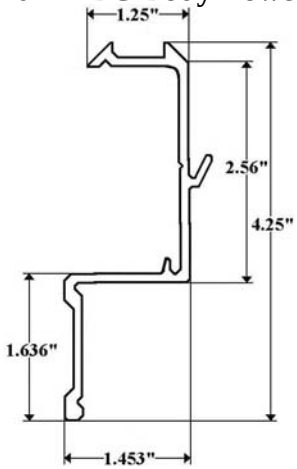

Use #7701 for Upper Top Rail

Part 7703- ABC Body Bottom Rail

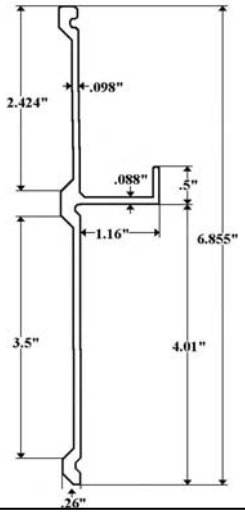

Part 7712S– ABC Stainless Roof Radius
Punched 4" Centers

16" X 89"

Part FP7700AF- ABC Rear Corner Cap

Part FP7700L- ABC Left/Front Corner Cap

Part FP7700R- ABC Right/Front Corner Cap

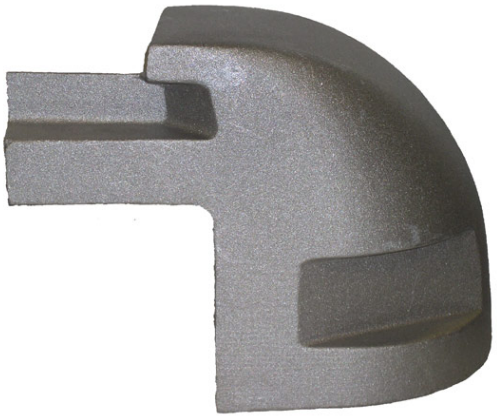

Part S5022- Steel Hat Post & Roof Bow

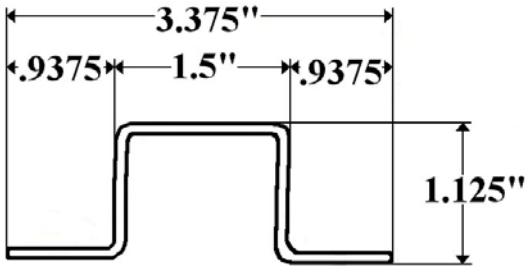

ABC Roof Bow & Side Post

A.M. Haire Body Parts Quick Reference Guide

Notes:

An A.M. Haire Model Number contains Body Type, Box Length in feet, Box Height in inches.

Body Types:

MTR — Moving Van, Aluminum Body
FRP — FRP Body
RFV — Refrigerated Body
TR — Aluminum Body

If the Model Number ends in a W the Width is 102”, otherwise the Width is 96”.

Example: MTR36113W
Moving Van, 36 feet long, 113 inches high, 102 inches wide

Example: TR2897
Aluminum Body, 28 feet long, 97 inches high, 96 inches wide

DISCLAIMER

USE OF OEM OR MANUFACTURERS’ NAME AND/OR PART NUMBERS IS FOR IDENTIFICATION PURPOSES AND SIMPLIFICATION ONLY AND IN NO WAY IS MEANT TO IMPLY THAT FLEET PARTS’ ITEMS ARE AUTHORIZED OR IN ANY WAY AFFILIATED WITH THOSE MANUFACTURERS.

Part 7002- Top Rail A.M. Haire

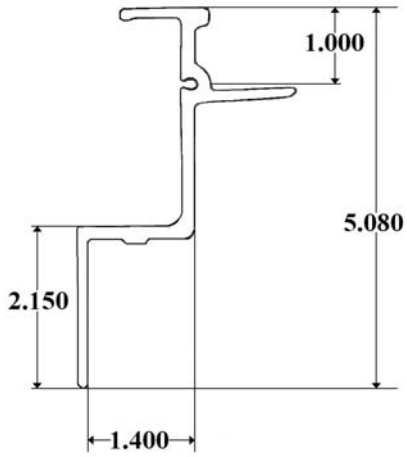

Part 7003– A. M. Haire Bottom Rail

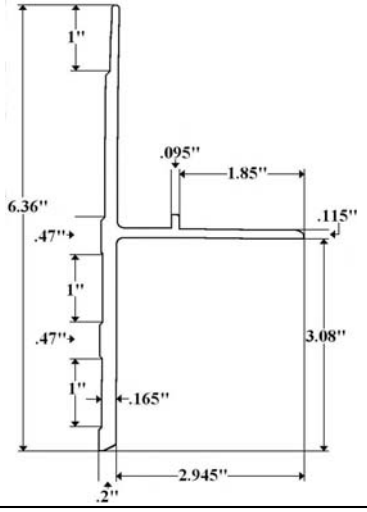

Part 7010 & 7010P (Polished)
Lengths- 98-3/8” & 125-3/8”-
A.M. Haire Front Corner Post

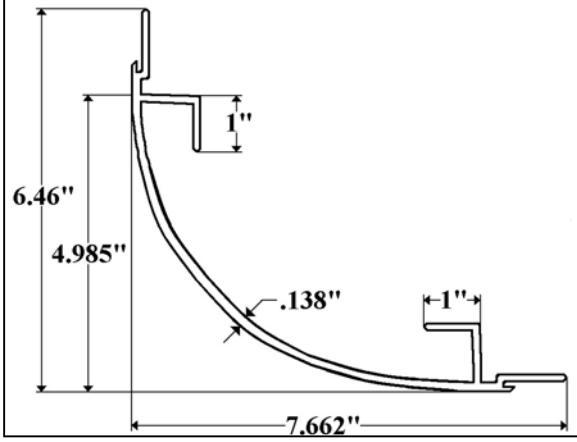

Part 7012M2– Roof Radius A.M Haire

Part 50204

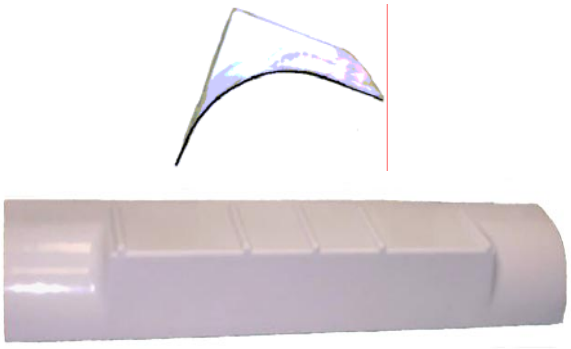

Reefer Dormer White
Fits 96” or 102” Wide Bodies

Part 7000B- A.M. Haire *Old Style* Front Bottom Cap

OBSOLETE

Part 7000L- A.M. Haire *Old Style* Left/Front Cap

OBSOLETE

Part 7000R- A.M. Haire *Old Style* Right/Front Cap

OBSOLETE

Part FP7000L- A.M. Haire Left/Front Cap

Part FP7000R- A.M. Haire Right/Front Cap

Part 321-1D (92.5”) & 321-1E (98.5”)–
A.M. Haire Roof Bow

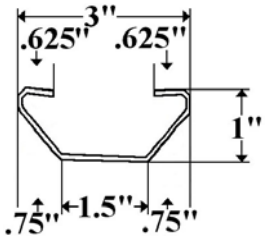

Part 7050/98-
1” Starter Bow A.M. Haire

Fits up to 102” Wide Bodies

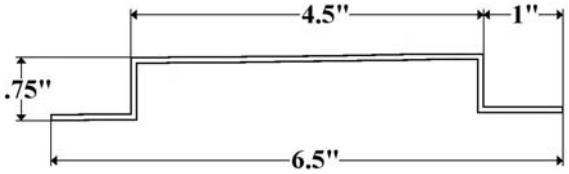

14 Ga. Galvanized

Part 732-2D (96”) & 2E (108”)-
Steel Z-Post A.M. Haire

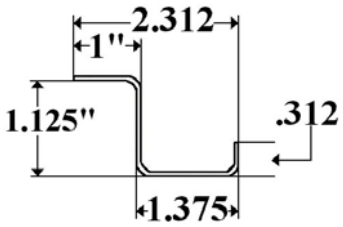

Punched 3” Centers

DLP108A (A Slot) & DLP108E (E Slot)
108” Double Logistic Wall Post

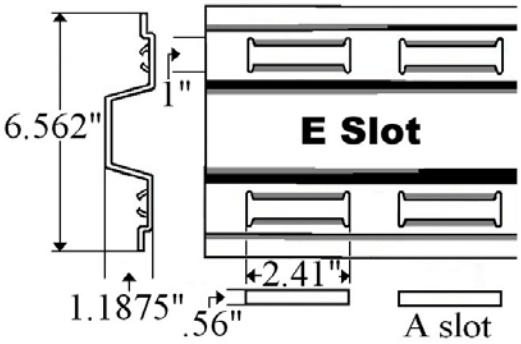

Part 118-001
1-1/2” x 12” Offset Hinge for A.M. Haire Side Door
Powder Coated Grey

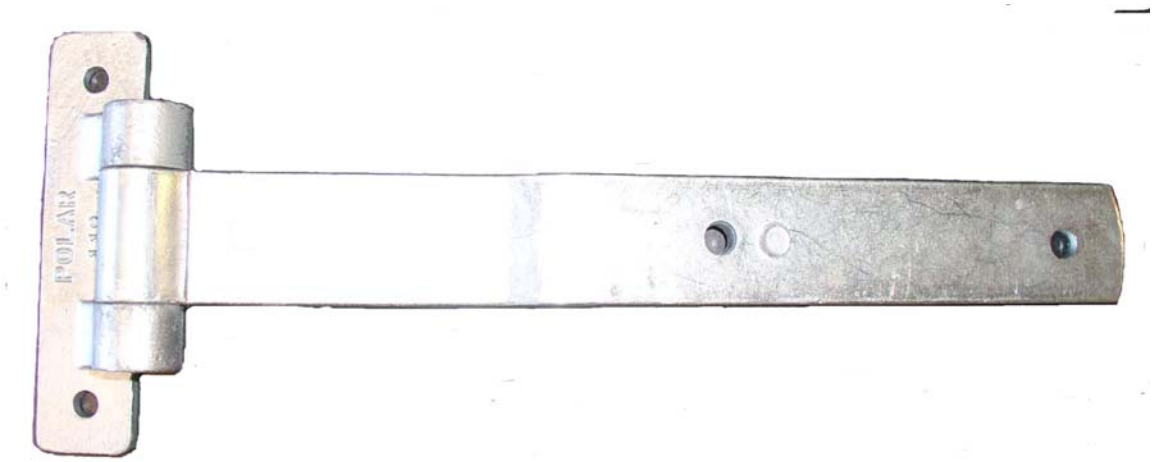

Part 7014/AMH
1-1/2” x 12” Offset Hinge for A.M. Haire Rear Door
Powder Coated Grey

American Commercial Body Parts Quick Reference Guide

Notes:

America's Body Company

DISCLAIMER

USE OF OEM OR MANUFACTURERS' NAME AND/OR PART NUMBERS IS FOR IDENTIFICATION PURPOSES AND SIMPLIFICATION ONLY AND IN NO WAY IS MEANT TO IMPLY THAT FLEET PARTS' ITEMS ARE AUTHORIZED OR IN ANY WAY AFFILIATED WITH THOSE MANUFACTURERS.

Part 08020 - American Commercial (America's Body Co.) Connector and Universal Rail

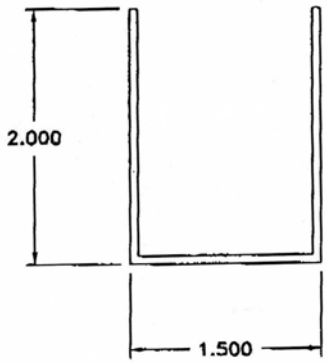

Part 232-2D (96"), 2E (108"), & 232-NH (108") *No Holes for FRP Body*- AC Steel Z Post

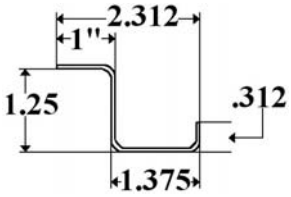

Punched on 3" Centers

Part 8002- Top Rail A/C

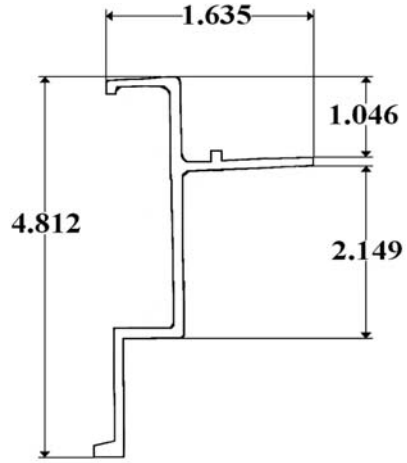

Part 8003- Bottom Rail A/C

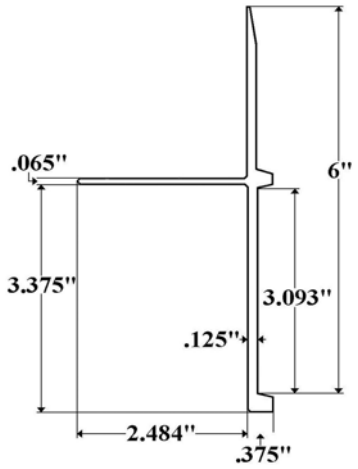

Part 8010E – American Commercial Front Corner Post

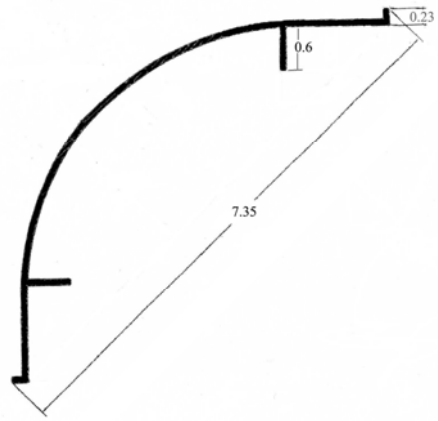

Part 820-1D (93-1/2”) &1E (99-1/2”)- Roof Bow

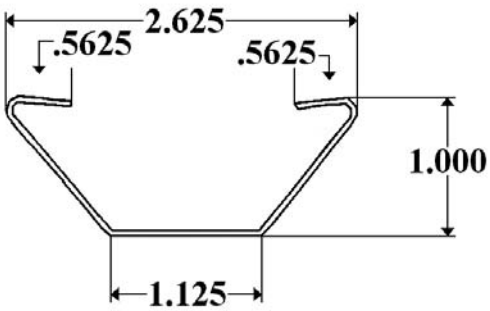

Part DPRR2496- A/C Aluminum Diamond Plate Roof Radius

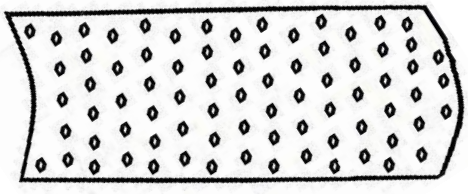

.080 X 24” X 96”

Part FP8000L- A/C Left/Front Cap

Part FP8000R- A/C Right/Front Cap

Part S3022- Steel Hat Starter Bow

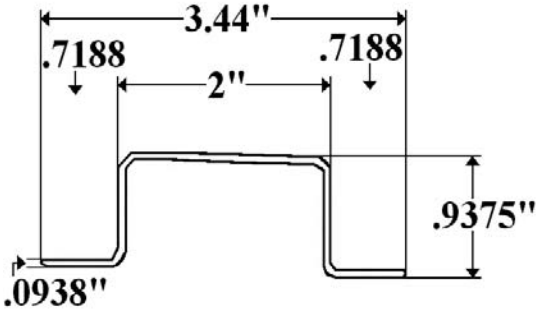

T-Nut Bolt

5/16-18 X 3/4 WITH SEAL & PATCH

Round Base T Nut

5/16-18 X 3/8

Babb Body Parts Quick Reference Guide

Notes:

Old Style BABB WITH BEVELED FRONT CORNER POST

New Style BABB WITH ROUND FRONT CORNER POST MODEL C

BRFV- *OLD STYLE* FRP
BRAV- *OLD STYLE* ALUMINUM
OSDA- *NEW STYLE* ALUMINUM
OSDF- *NEW STYLE* FRP

DISCLAIMER

USE OF OEM OR MANUFACTURERS' NAME AND/OR PART NUMBERS IS FOR IDENTIFICATION PURPOSES AND SIMPLIFICATION ONLY AND IN NO WAY IS MEANT TO IMPLY THAT FLEET PARTS' ITEMS ARE AUTHORIZED OR IN ANY WAY AFFILIATED WITH THOSE MANUFACTUR-

Part 332-2D (97”), 2E (108”) & 2F (112”)- Aluminum Z-Post Babb *Old Style*

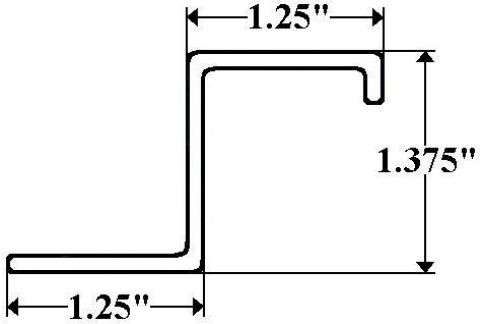

Part 333-2- Starter Roof Bow Babb 108”

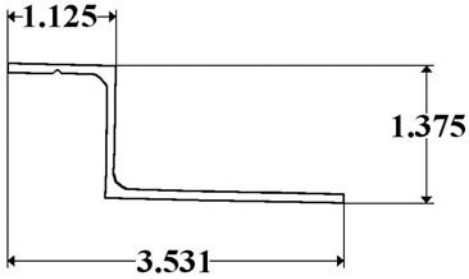

Part 421-1D (92”) & 1E (98”)– Roof Bow Babb

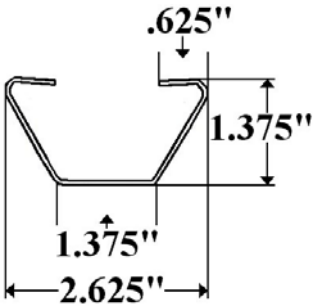

Part 9001- Top Rail Babb *Old Style*

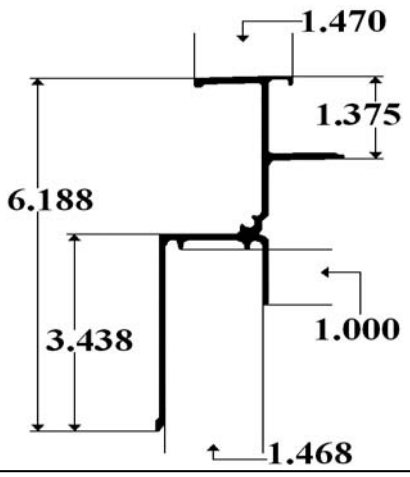

Part 9002- Top Rail Babb *New Style*

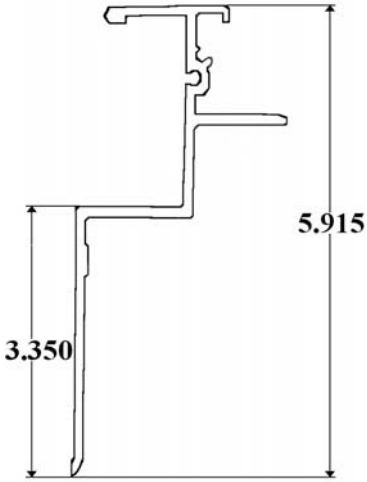

Part 9003- Babb Bottom Rail *New Style*

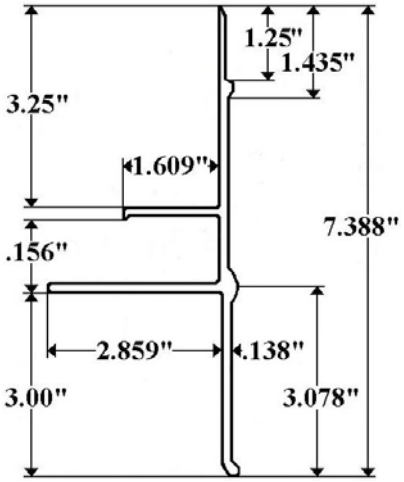

Part 9010FRP- Babb Corner Post-
FRP Body

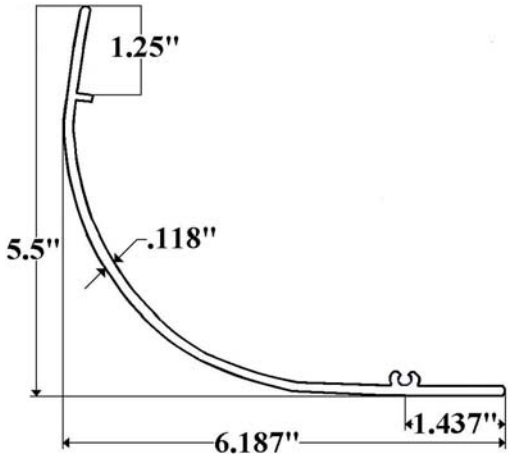

Part 9010E– Babb Corner Post
Aluminum Body

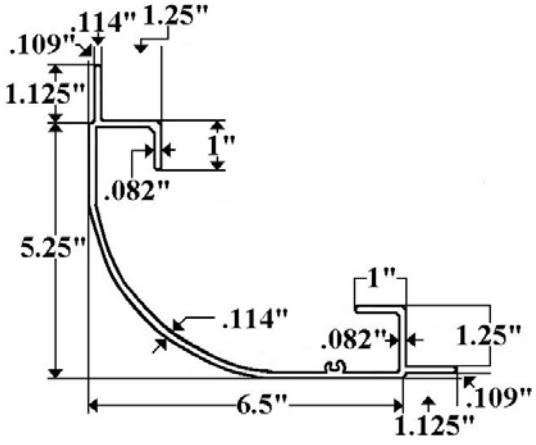

Part FC102– Babb *Old Style*
Front Bottom Cap

Part FP9000L- Babb *Old Style*
Left/Front Cap

Part FP9000R- Babb *Old Style*
Right/Front Cap

Part FP9500L- Babb *New Style*
Left/Front Corner Cap

Part FP9500R- Babb *New Style*
Right/Front Corner Cap

Part DPRR2496- Babb Aluminum Diamond Plate Roof Radius

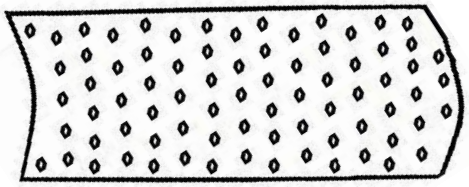

.080 X 24” X 96”

Part S332-2D (97”) & 2E (108”) – Steel Z Post *New Style*

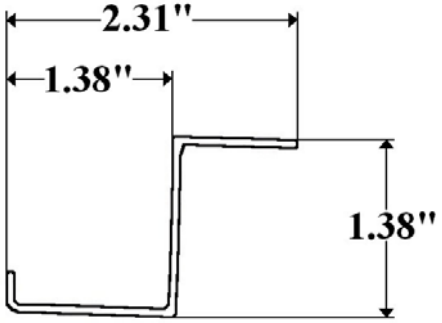

Punched 2” Centers

Part TRV1- Corner Post Babb *Old Style*

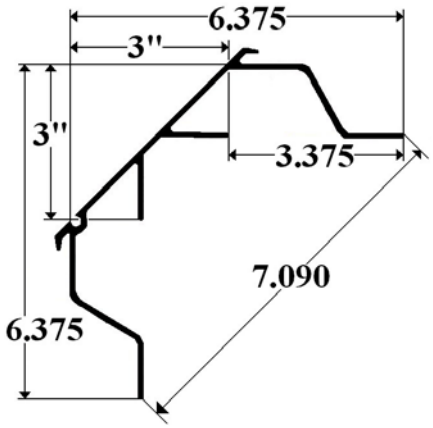

Part TRVBOT- Bottom Rail Babb *Old Style*

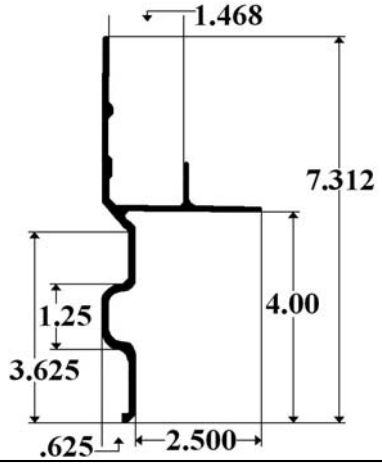

Continental Truck Body Parts Quick Reference Guide

Notes:

DISCLAIMER

USE OF OEM OR MANUFACTURERS' NAME AND/OR PART NUMBERS IS FOR IDENTIFICATION PURPOSES AND SIMPLIFICATION ONLY AND IN NO WAY IS MEANT TO IMPLY THAT FLEET PARTS' ITEMS ARE AUTHORIZED OR IN ANY WAY AFFILIATED WITH THOSE MANUFACTURERS.

Part 00078– Roof Radius

M-Mill **W-White**

00078M	24”	X	96”
00078W	24”	X	96”

Part 307-2- Bottom Rail

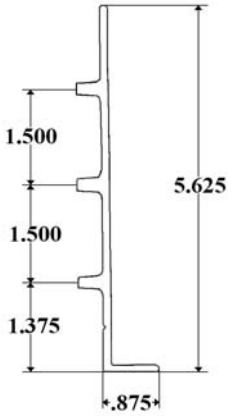

Good Replacement
Must Change Complete

Part CON-L- Continental
Left/Front Cap

Part CON-R- Continental
Right/Front Cap

Part CON-S- Continental Front Cap
Straight Roof

Part C-334- Aluminum Diamond Plate
Corner Radius

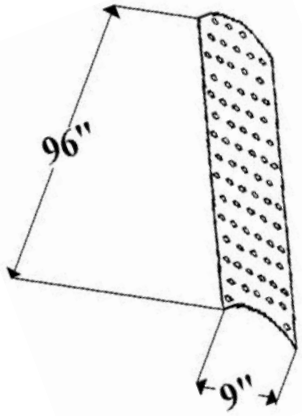

Continental

Part C-531 - Top Rail

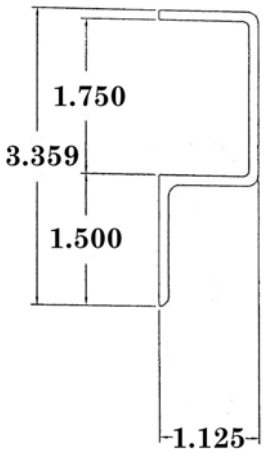

Delta FZ
Delta QX
Gindy
Vanco
Body Parts
Quick Reference

Notes:

IF A BODY HAS REAR CORNER CAPS, IT'S A DELTA QX MODEL. IF NOT, IT'S A DELTA FZ, GINDY, OR VANCO.

QX HAS BOTH STRAIGHT FRONT ROOF & RADIUS ROOF. STRAIGHT ROOF USES AC1052 CORNER CAPS. RADIUS ROOF USES AC2165R&L CORNER CAPS.

DISCLAIMER

USE OF OEM OR MANUFACTURERS' NAME AND/OR PART NUMBERS IS FOR IDENTIFICATION PURPOSES AND SIMPLIFICATION ONLY AND IN NO WAY IS MEANT TO IMPLY THAT FLEET PARTS' ITEMS ARE AUTHORIZED OR IN ANY WAY AFFILIATED WITH THOSE MANUFACTURERS.

Delta FZ, Gindy, Vanco

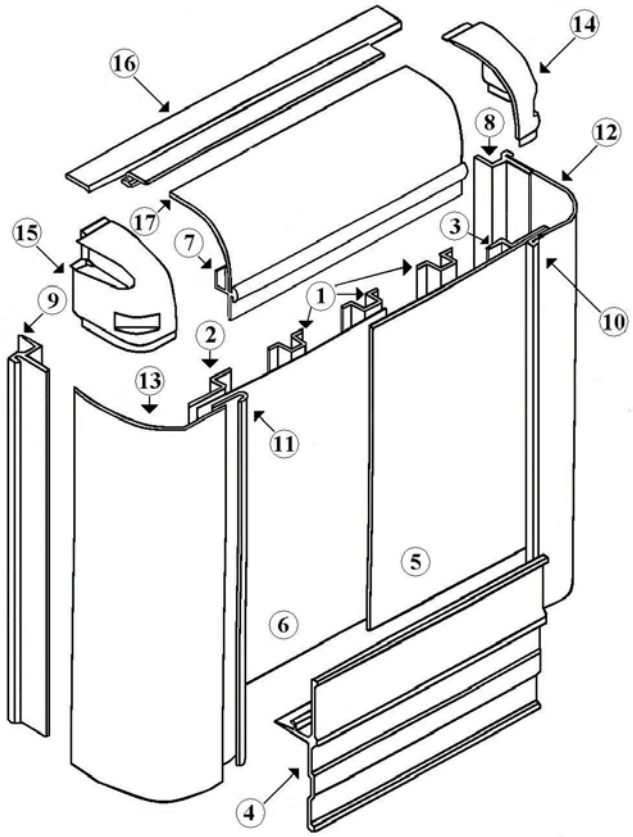

Number	Part Number	Description
1	S2022 232-2D & 2E	Hat Post Z Post
2 & 3	232-2D	Replace with 232-2D
4	5003	Replace with 5003
5 & 6	.040 X 49” X 96”	.040 X 49” X 96” Pre-Painted Panel
7	01025 01026	Replace with 01025 for Aluminum Body & 01026 for FRP Body
8 & 9		Replace with 077020
10 & 11		Replace with 001J/96
12 & 13	1010M	Use 1010M Trim 1” from Flat Side to make it 14.5” Wide
14	3950L	Front Corner Cap Left Side
15	3950R	Front Corner Cap Right Side
16	S2022	Starter Bow use S2022
17	1012M2	Use 1012M2

Delta FZ, Gindy, Vanco

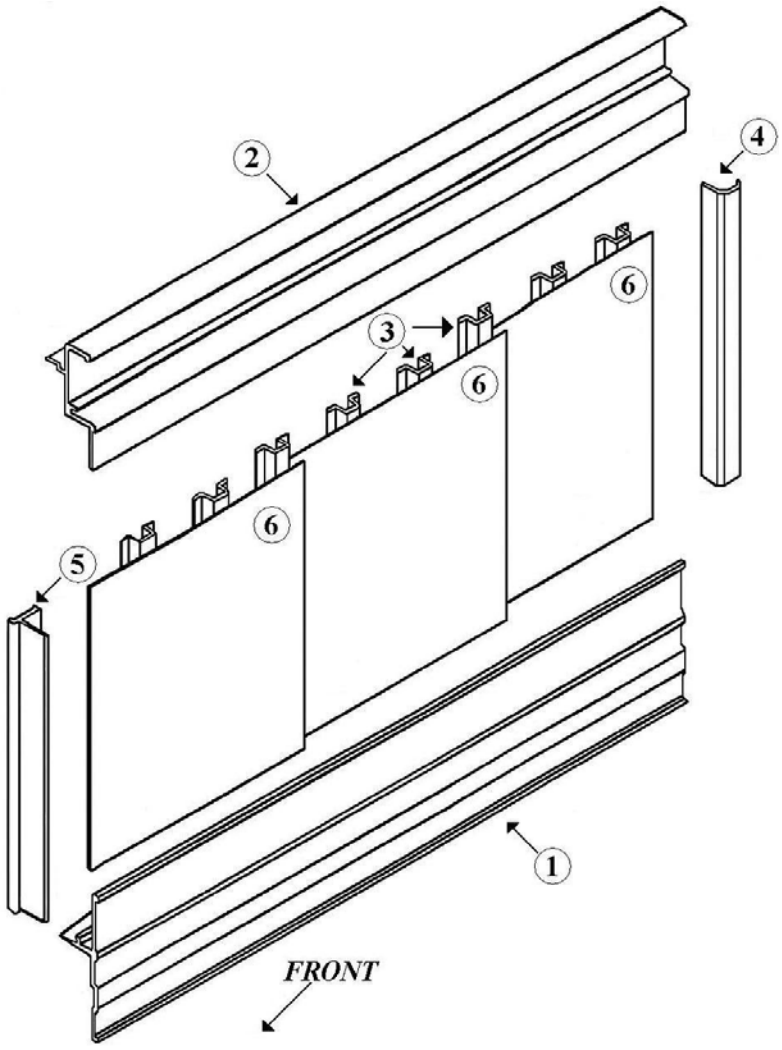

Number	Part Number	Description
1	5003	Replace Complete
2	7002	Replace Complete
3	S2022 or 232-2D	S2022 Hat Post or 232-2D Z-Post
4	077020	
5	01021	Use 01021
6	.040 X 49” X 96”	.040 X 49” X 96” Prepainted Panel

Part 01021- Vertical Connector
FRP Body

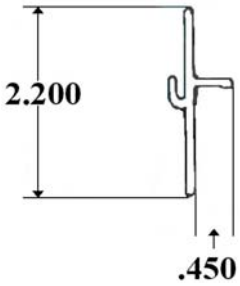

OEM # 001481

Part 01025- Horizontal Connector
Aluminum Body

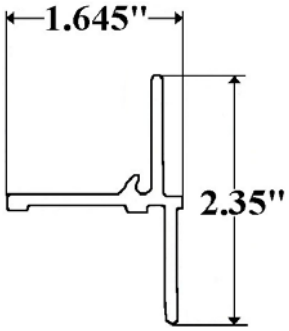

OEM # 14142

Part 01026- Horizontal Connector
FRP Body

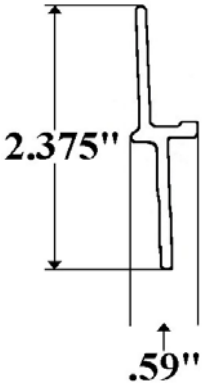

OEM # 6900146

Part 077020- Vertical Connector
Aluminum Body

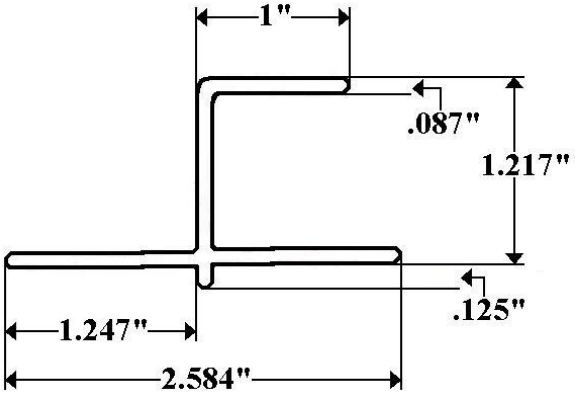

Part 1010M- Corner Radius *Mill*
15.28 X 96”

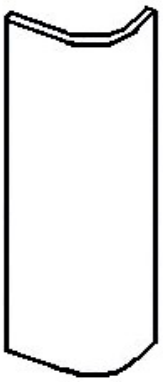

Trim 1” from Flat Side to make it 14.5” Wide

Part 1012M2- Roof Radius *Mill*
19.28 X 86.88

Part 232-2D (96”), 2E (108”), & 232-NH (108”)- *No Holes for FRP Body*
Steel Z Post

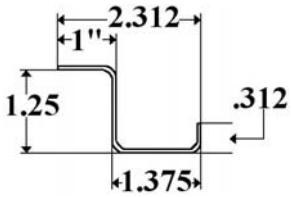

Punched on 3” Centers

Part 390-1D (93”) & 1E (99”)- Roof Bow

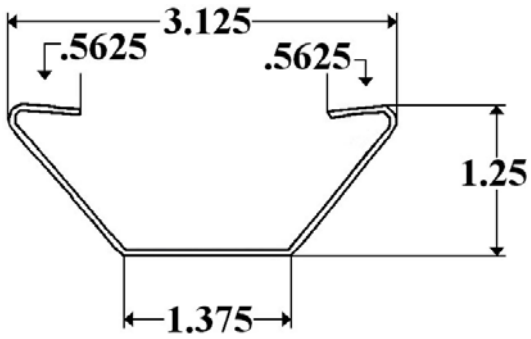

Part 3950L- Delta FZ, Gindy, Vanco
Left/Front Cap

Part 3950R- Delta FZ, Gindy, Vanco
Right/Front Cap

Part 5003- Bottom Rail

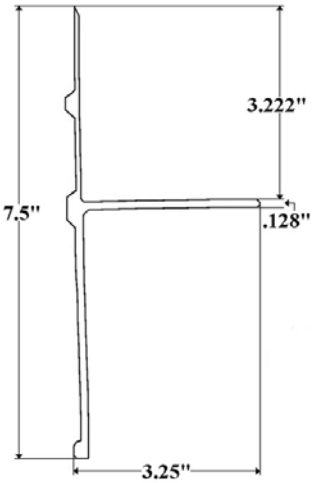

Replace Complete

Part 7002- Top Rail

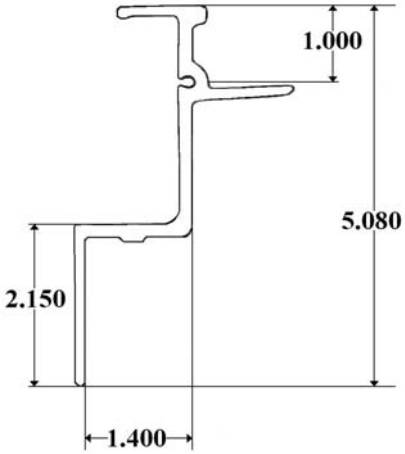

Replace Complete

Part QX111- Side Door Frame Delta

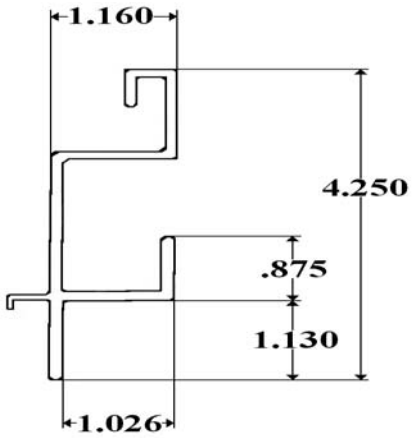

Part S2022– Steel Hat Roof Bow & Side Post

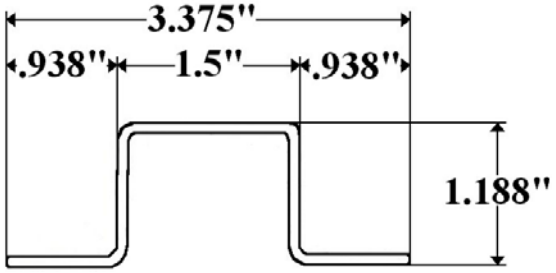

Delta QX

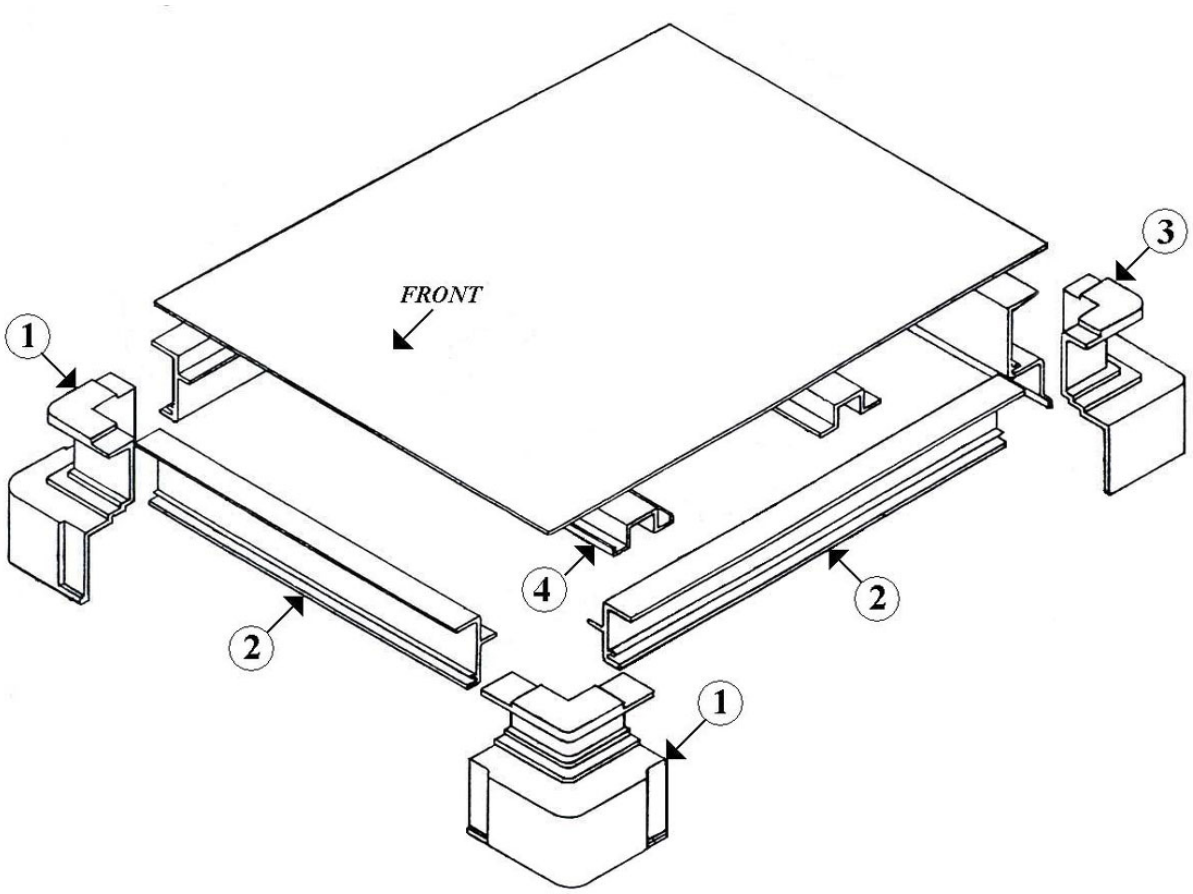

Number	Part Number	Description
1	AC 1052	Front Corner Caps
2	7002	Replace Complete Top Rail
3	AC816	Rear Corner Caps
4	S2022	Hat Roof Bow & Side Posts

Note: QX with Radius Roof uses AC2165R (Right) & AC2165L (Left) Corner Caps

Part 7002- Top Rail Delta QX

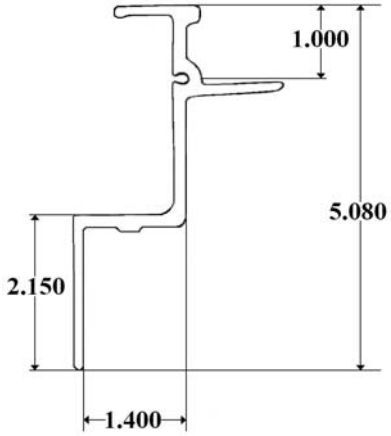

Change Complete

Part AC1052- Delta QX Front Cap

Part AC816- Delta QX Rear Cap

Part AC2165L- Delta QX Left/Front Cap

Part AC2165R- Delta QX Right/Front Cap

Part QX111- Delta Side Door Frame

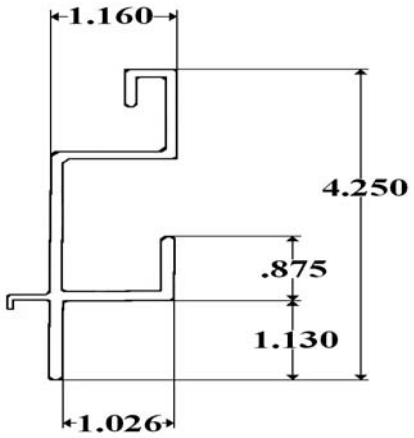

Part S2022- Delta QX Steel Hat Post & Roof Bow

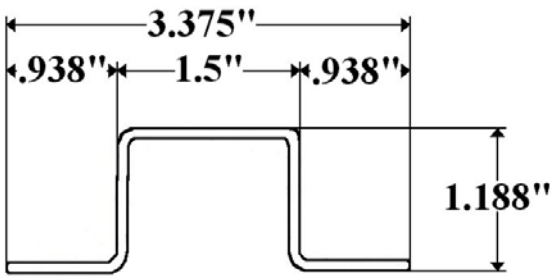

Part TRVBOT- Delta QX Bottom Rail

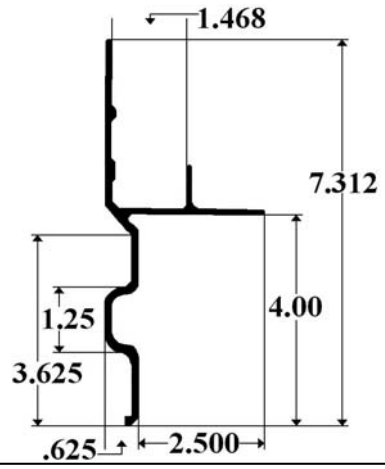

Duralite Body Parts Quick Reference Guide

Notes:

DISCLAIMER

USE OF OEM OR MANUFACTURERS' NAME AND/OR PART NUMBERS IS FOR IDENTIFICATION PURPOSES AND SIMPLIFICATION ONLY AND IN NO WAY IS MEANT TO IMPLY THAT FLEET PARTS' ITEMS ARE AUTHORIZED OR IN ANY WAY AFFILIATED WITH THOSE MANUFACTURERS.

Part 00054- Duralite Corner Post- Aluminum Body

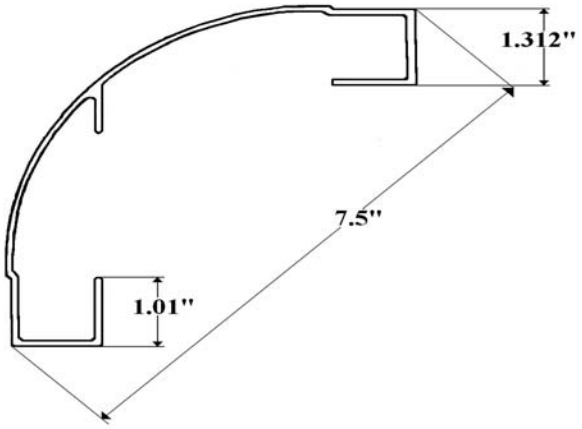

Part 00078– Roof Radius Duralite

M-Mill **W-White**

00078M	24”	X	96”
00078W	24”	X	96”

Used with 1211&1212 Corner Caps

Part 00117- Duralite Top Rail

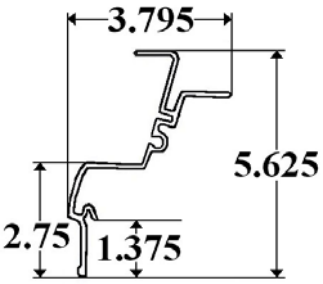

Part 10126– Duralite Rear Corner Post

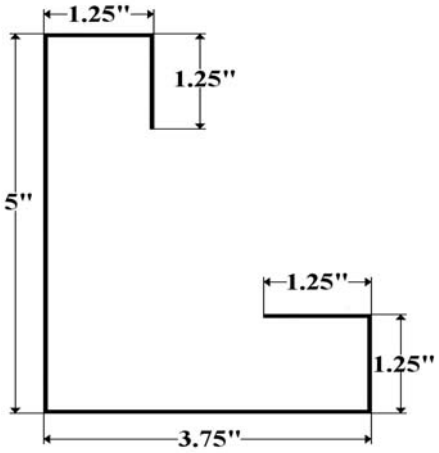

Part 10250 (96”)- Starter Bow Duralite

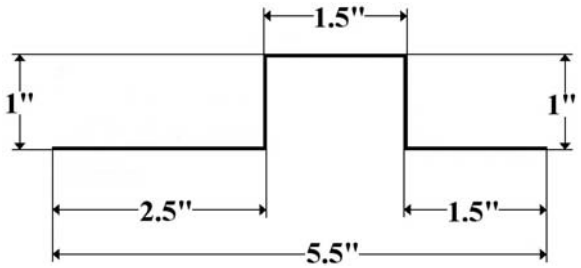

Part 1201- Duralite Left/Front Cap
16” Radius

Used with 3912W Roof Radius

Part 1202- Duralite Right/Front Cap
16” Radius

Used with 3912W Roof Radius

Part 1211- Duralite Left/Front Cap
10” Radius

Used with 00078M or W Roof Radius

Part 1212- Duralite Right/Front Cap
10” Radius

Used with 00078M or W Roof Radius

Part 1401- Duralite Right/Rear Cap

Part 1402- Duralite Left/Rear Cap

Part 2003F- Duralite Replacement Bottom Rail

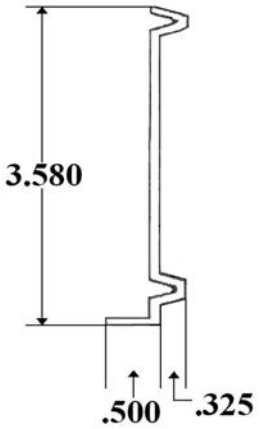

Must Replace Complete

Part 334-2- Duralite FRP Front Corner Post

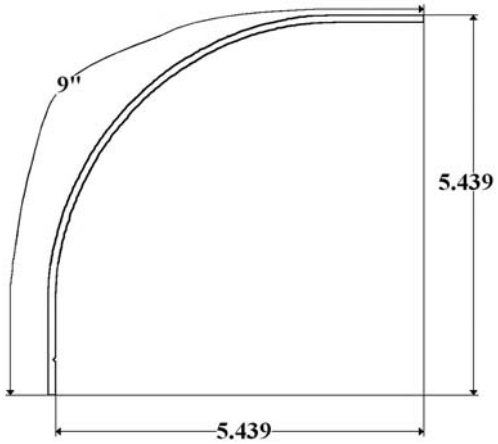

Part 3912W (White)- Duralite Roof Radius

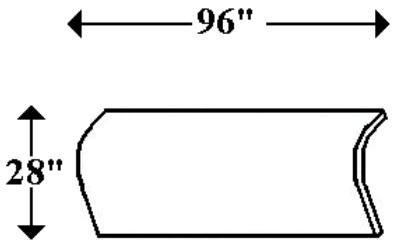

Used with 1201 & 1202 Corner Caps

Part 3963- Duralite Front Cap For Straight Roof

Part 531- End Cap

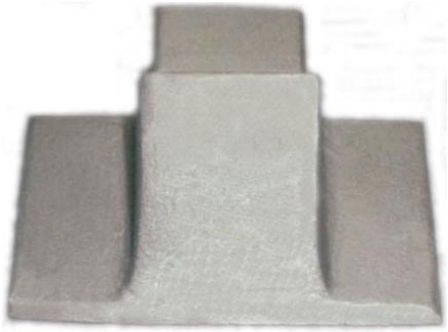

For RR531 Extrusion

Part 971- Duralite *Old Style* Rear Cap

Part RR531- RUB Rail

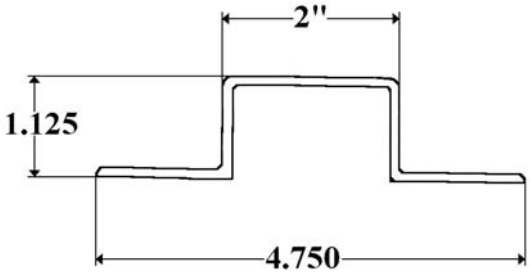

Uses Casting #531

Part S2022– Duralite Roof Bow

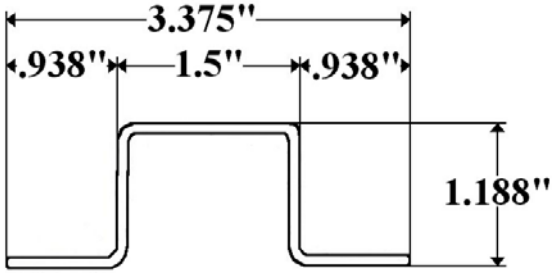

Grumman Body Parts Quick Reference Guide

Notes:

ALUMINUM Z-POST 332-2D, E USED WITH FP4000R&L CORNER CAPS.
STEEL Z-POST 732-2D, E USED WITH FP4500R&L CORNER CAPS & FP4100R&L

DISCLAIMER

USE OF OEM OR MANUFACTURERS' NAME AND/OR PART NUMBERS IS FOR IDENTIFICATION PURPOSES AND SIMPLIFICATION ONLY AND IN NO WAY IS MEANT TO IMPLY THAT FLEET PARTS' ITEMS ARE AUTHORIZED OR IN ANY WAY AFFILIATED WITH THOSE MANUFACTURERS.

Part 01021– Grumman Vertical Connector

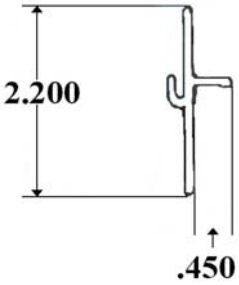

Used only with FP4100R & L Plastic Corner Caps

OEM # 001481

Part 01026– Grumman Horizontal Connector

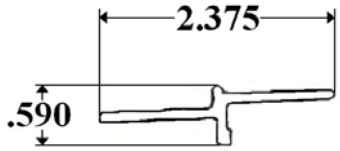

Used only with FP4100R & L Plastic Corner Caps

OEM # 6900146

Part 1014M- Corner Radius Grumman

M-Mill

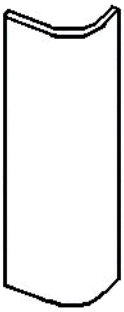

1014M	16.687	X	96”
1014M/102	16.687	X	102”

Used only with FP4100R & L Plastic Corner Caps

Part 332-2D (97”), 2E (108”) & 2F (112”)- Aluminum Z-Post Grumman

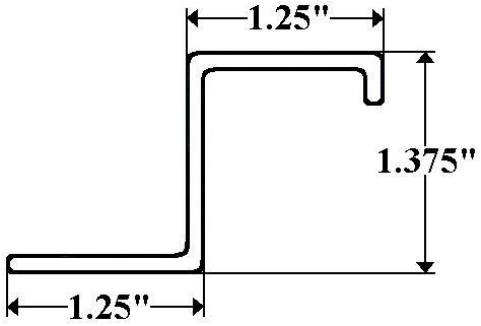

Used with FP4000R&L Corner Caps

Part 4002- Top Rail Grumman

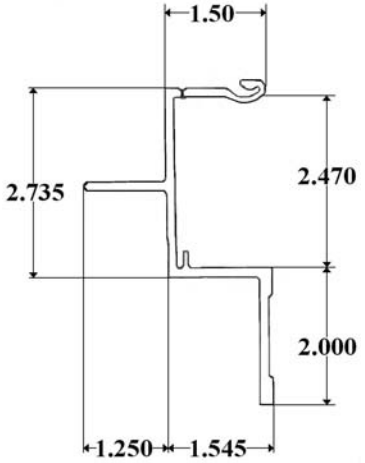

Use with Interlock

Part 4003- Bottom Rail Grumman

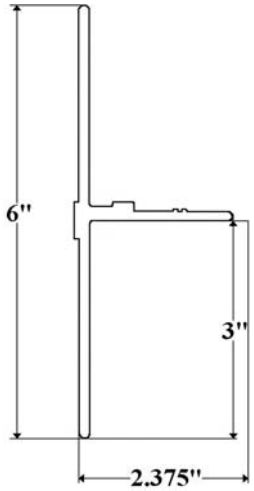

Interlock for Grumman Top Rail

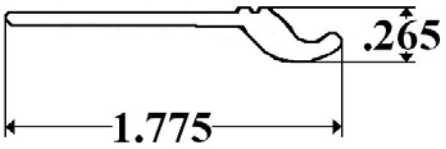

Use with 4002 Top Rail

Part 4012/102- Grumman Roof Radius

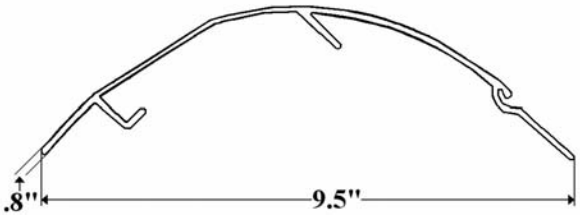

Used with FP4500R&L Corner Caps

Part 4012L- Grumman Roof Radius Lower of 2 Pieces (Upper #4012U)

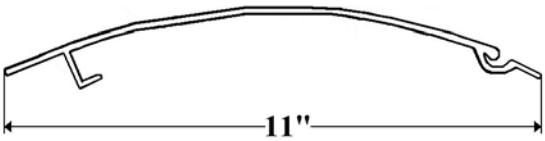

Used with FP4000R&L Corner Caps

Part 4012M (Mill), 4012PY (Penske Yellow)- Grumman Roof Radius

Used with FP4100R&L Corner Caps

Part 4012U- Grumman Roof Radius Upper of 2 Pieces (Lower #4012L)

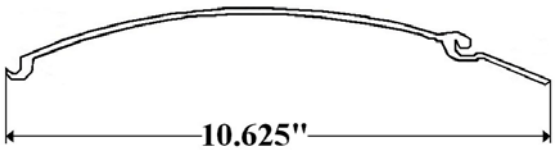

Used with FP4000R&L Corner Caps

Part 419-1D (92.5) & 419-1E (98.5)-
Roof Bow Grumman

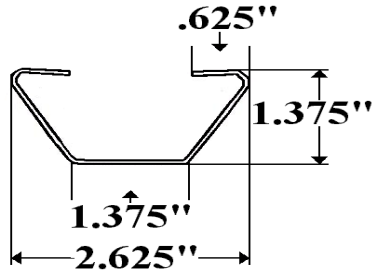

Part 4030/103 (103.5”) & 4030/112 (112”)-
Corner Post Grumman

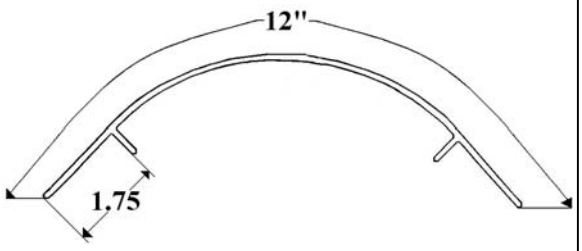

Part 732-2D (96”), 2E (108”) & *Punched 3” Centers*
732-NH (No Holes) for FRP Bodies-
Grumman Steel Z-Post

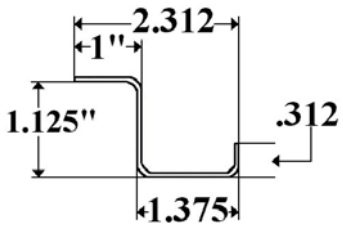

Used with FP4500R&L Corner Caps

Part FP4000AF– Grumman Rear Corner Cap

Part FP4000L– Grumman Left/Front Cap

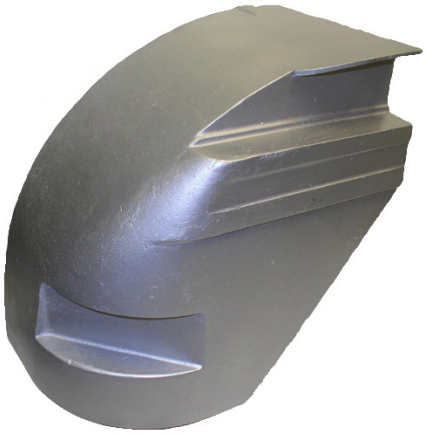

Part FP4000R– Grumman Right/Front Cap

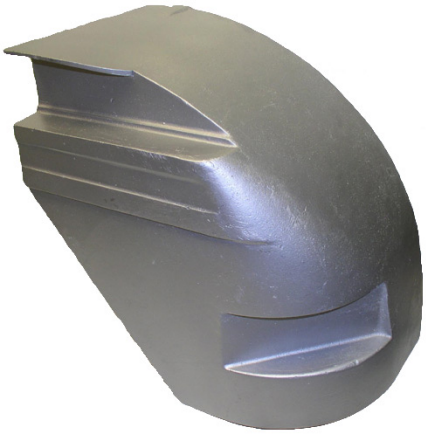

Part FP4100L– Grumman Left/Front Plastic Cap

Part FP4100R– Grumman Right/Front Plastic Cap

Part FP4500L- Grumman
Left/Front Cap

Part FP4500R- Grumman
Right/Front Cap

Part FP4510L- Grumman
Left/Front Cap

Grumman Family Van

Part FP4510R- Grumman
Right/Front Cap

Grumman Family Van

Part GR1- Grumman Rear Header

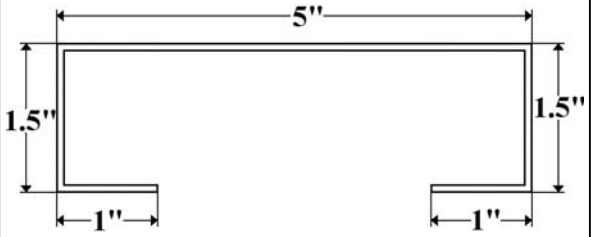

Part GR2- New Grumman Rear Header

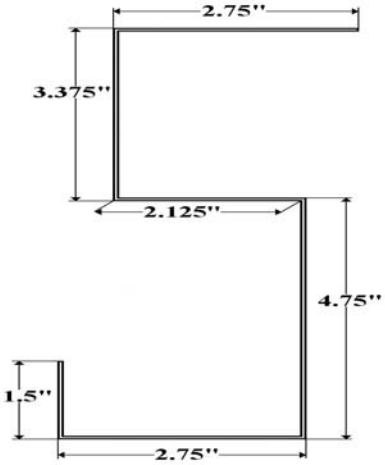

Part GR3 (108”)- Grumman Rear Corner Post

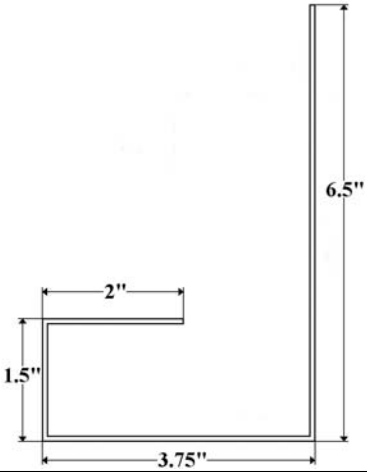

Part GR3-1 (108”)- Grumman Rear Corner Post

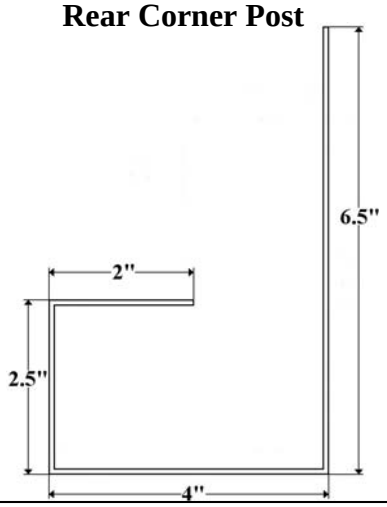

Part S5022-Front Vertical Connector
Grumman Aluminum Body

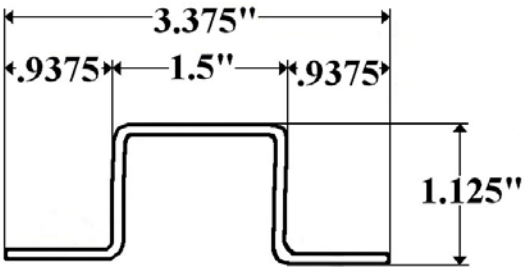

T-Nut

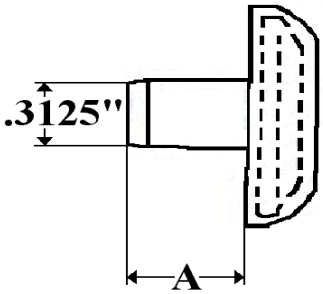

5/16-18	X	7/16”	Grey
5/16-18	X	7/16”	White
5/16-18	X	5/8”	White

T-Nut Bolt

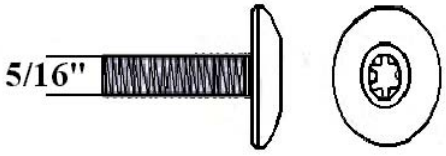

5/16-18	X	1/2”	Torx HD
5/16-18	X	3/4”	Torx HD
5/16-18	X	1”	Torx HD

All with Patch
Uses TX 40 Bit

Grumman V -Body Body Parts Quick Reference Guide

Notes:

MODEL NUMBER EXPLANATION

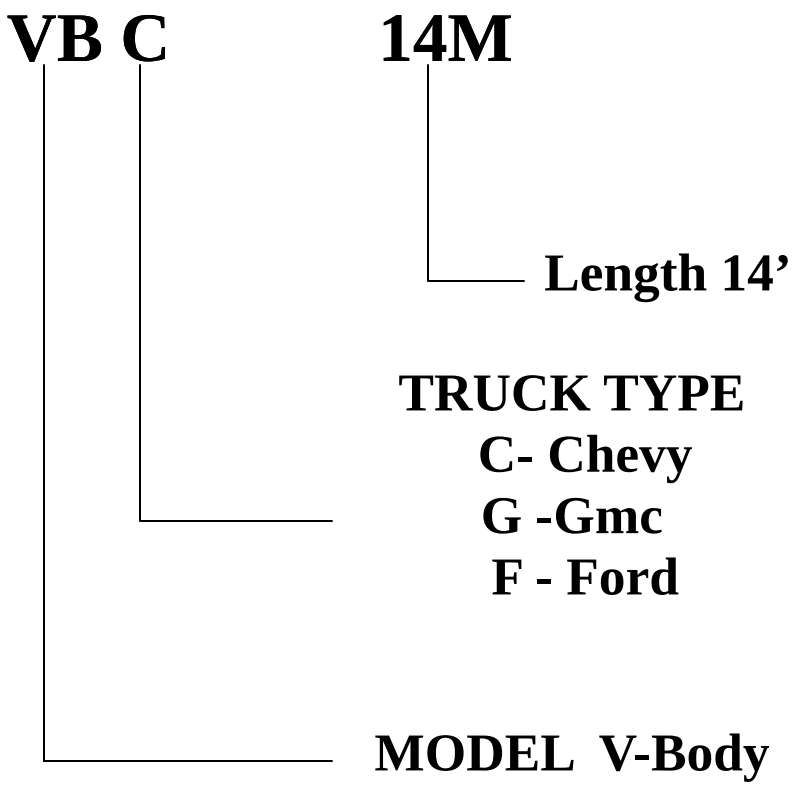

DISCLAIMER

USE OF OEM OR MANUFACTURERS’ NAME AND/OR PART NUMBERS IS FOR IDENTIFICATION PURPOSES AND SIMPLIFICATION ONLY AND IN NO WAY IS MEANT TO IMPLY THAT FLEET PARTS’ ITEMS ARE AUTHORIZED OR IN ANY WAY AFFILIATED WITH THOSE MANUFACTURERS.

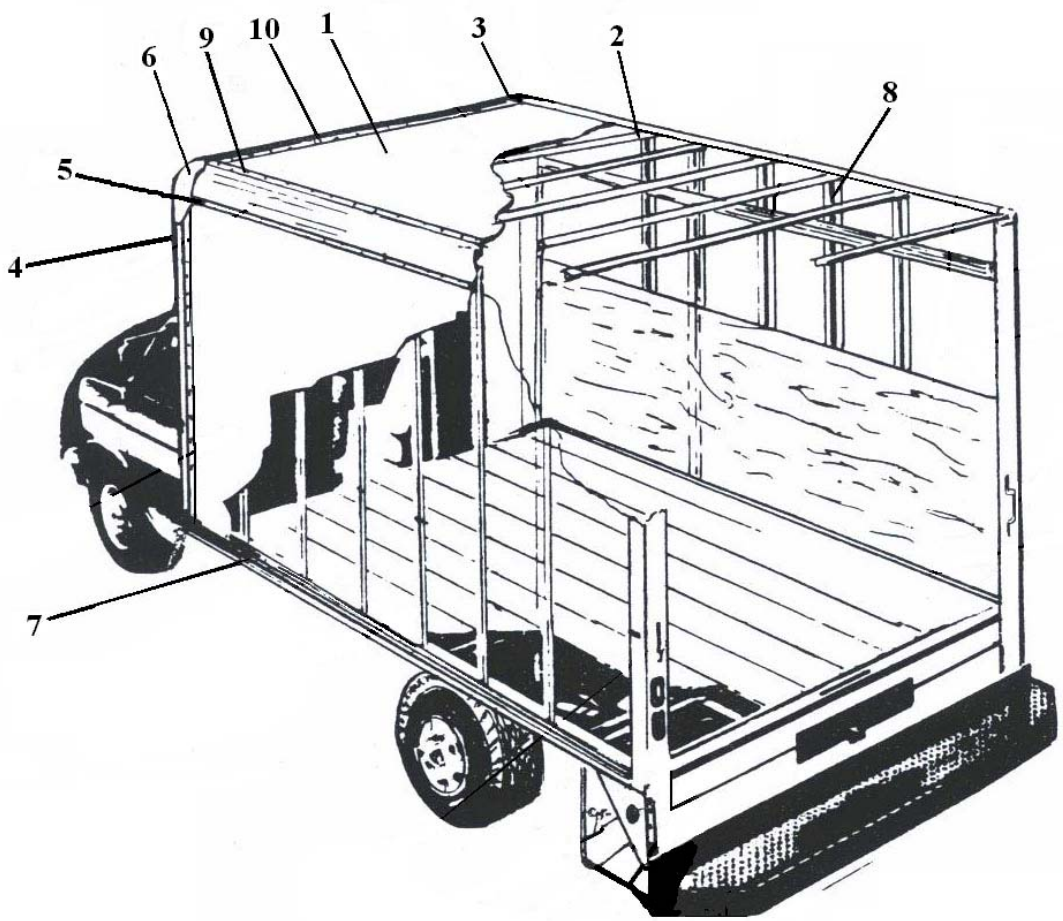

Number	Part Number	Description
1	AR040X96	ALUMINUM ROOFING
2	VB806	STEEL ROOF BOW
3	FP800RF	RIGHT FRONT CORNER CAP (CURBSIDE)
4	VB801	FRONT CORNER POST (USES INTERLOCK)
5	INTERLOCK	INTERLOCK
6	FP800LF	LEFT FRONT CORNER CAP (ROADSIDE)
7	2002F	BOTTOM RAIL (REPLACEMENT) MUST CHANGE COMPLETE
8	VB805	STEEL HAT SIDE POST
9	VB804/16	TOP RAIL (REPLACEMENT) MUST CHANGE COMPLETE 16’
10	VB802	ROOF RADIUS LOWER
10	VB803	ROOF RADIUS UPPER

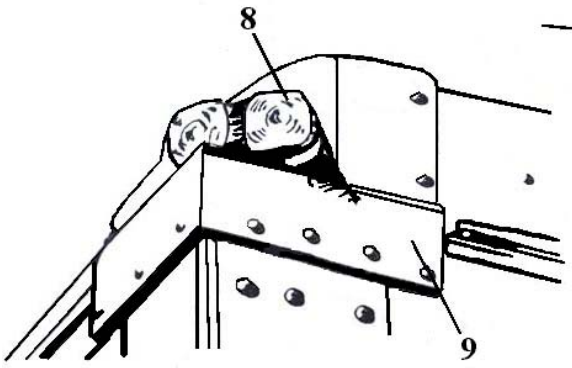

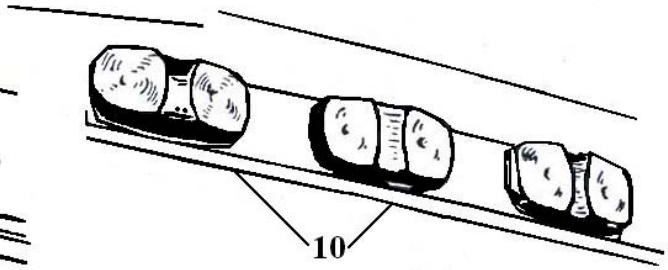

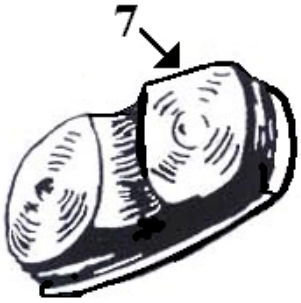

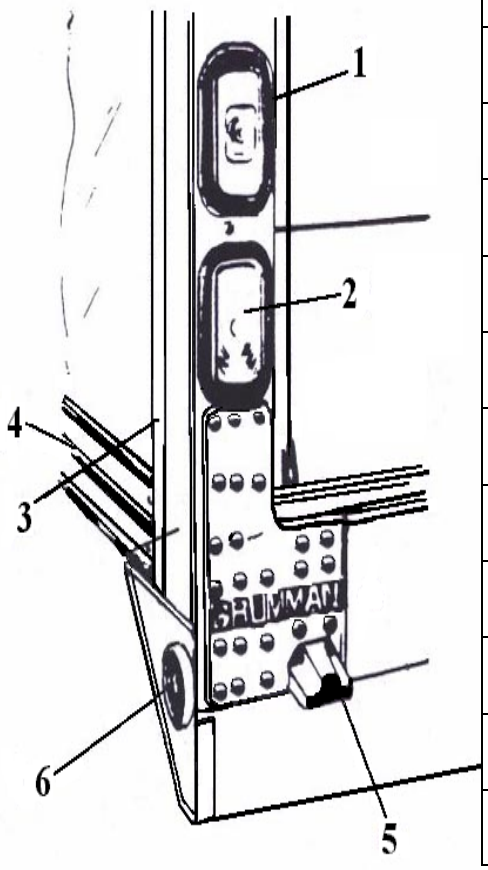

Number	Part Number	Description
1	VB811BO	REAR STOP LIGHT WITH BACK UP
2	VB811R	REAR SIGNAL LIGHT
3	INTERLOCK	INTERLOCK
4	2003F	A REPLACEMENT BOTTOM RAIL-MUST CHANGE COMPLETE
5	V436SX	A REPLACEMENT LICENSE LIGHT CHROME
6	B486R	REFLECTOR RED (REAR)
6	B486A	REFLECTOR AMBER (FRONT)
7	VSM9007R	RED MARKER LIGHT LENS (REAR)
7	VSM9007A	AMBER MARKER LIGHT LENS (FRONT)
8	VSM1211R	RED MARKER LIGHT (REAR)
8	VSM1211A	AMBER MARKER LIGHT(FRONT)
9	FP800LR	LEFT REAR CORNER CAP
9	FP800RR	RIGHT REAR CORNER CAP
10	1216R	BAR LIGHT RED (REAR)
10	1216A	BAR LIGHT AMBER (FRONT)

Part FP800LF- Grumman V-Body Left/Front Cap

Part FP800RF- Grumman V-Body Right/Front Cap

Part FP800LR– Grumman V-Body Left/Rear Cap

Use VSM 1211R Light

Part FP800RR– Grumman V-Body Right/Rear Cap

Use VSM 1211R Light

Part VB804/16 (16')- Replacement Top Rail V-Body

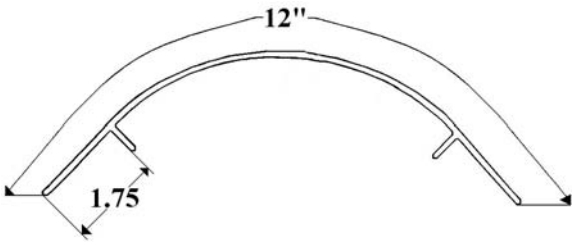

Must Replace Complete

Jannell Body Parts Quick Reference Guide

Notes:

BODIES AFTER 1990 COULD BE U.S. TRUCK BODY OR HEWITT-LUCAS.

DISCLAIMER

USE OF OEM OR MANUFACTURERS' NAME AND/OR PART NUMBERS IS FOR IDENTIFICATION PURPOSES AND SIMPLIFICATION ONLY AND IN NO WAY IS MEANT TO IMPLY THAT FLEET PARTS' ITEMS ARE AUTHORIZED OR IN ANY WAY AFFILIATED WITH THOSE MANUFACTURERS.

Part 00078– Roof Radius Jannell

M-Mill **W-White**

00078M	24”	X	96”
00078W	24”	X	96”

Part 1002- Jannell Replacement Top Rail 1-3/8 Roof Bow

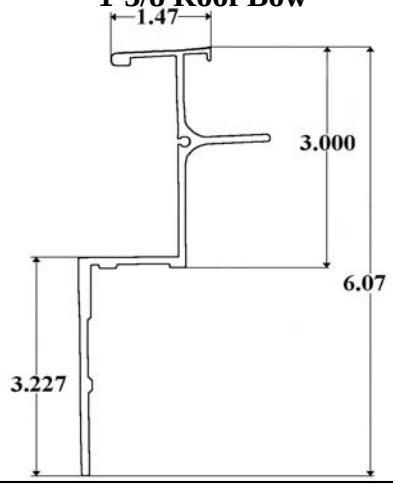

Part 332-2D (97”), 2E (108”) & 2F (112”)- Aluminum Z-Post Jannell

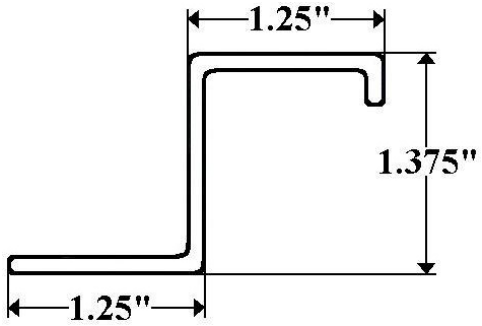

Part 421-1D (92”) & 1E (98”)- Jannell Roof Bow

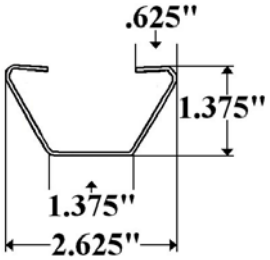

Part 427-1- Starter Bow Jannell 98”

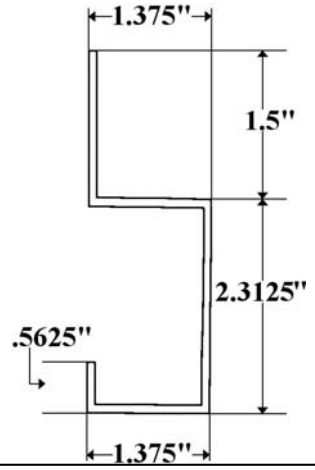

Part FC201R- Jannell Right/Front Cap

Part FC202L- Jannell Left/Front Cap

Part RC101- Jannell Rear Cap

Kidron Body Parts Quick Reference Guide

Notes:

Kidron Ultra Body
Model Number Explanation Chart

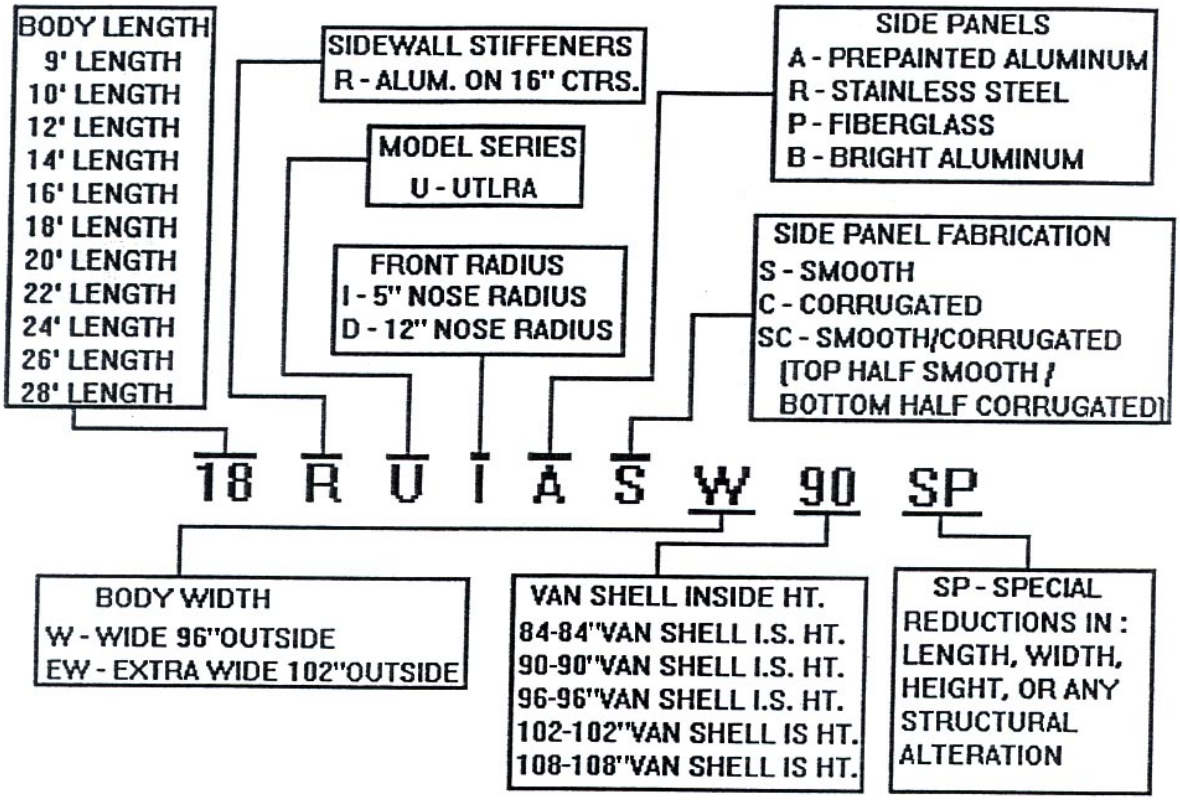

DISCLAIMER

USE OF OEM OR MANUFACTURERS' NAME AND/OR PART NUMBERS IS FOR IDENTIFICATION PURPOSES AND SIMPLIFICATION ONLY AND IN NO WAY IS MEANT TO IMPLY THAT FLEET PARTS' ITEMS ARE AUTHORIZED OR IN ANY WAY AFFILIATED WITH THOSE MANUFACTURERS.

Notes:

Kidron Cargo Star Dry Freight Body
Model Number Explanation Chart

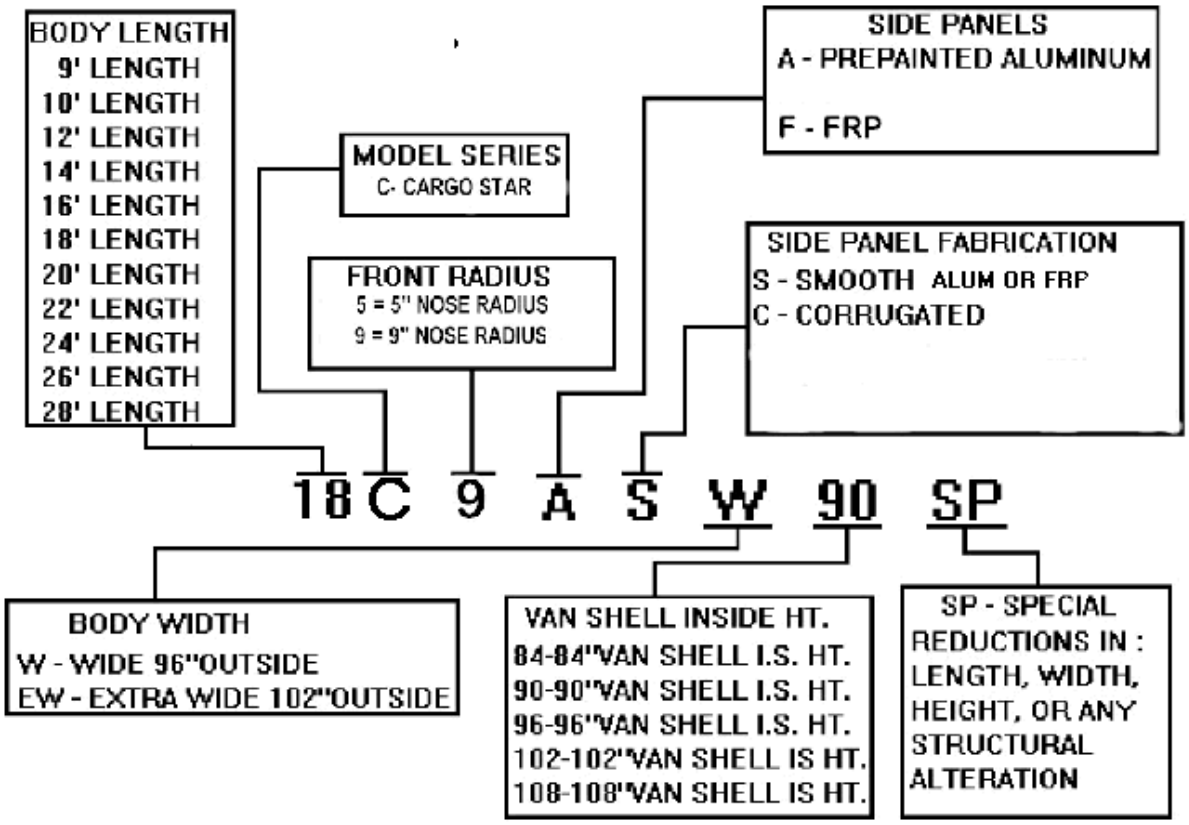

DISCLAIMER

USE OF OEM OR MANUFACTURERS' NAME AND/OR PART NUMBERS IS FOR IDENTIFICATION PURPOSES AND SIMPLIFICATION ONLY AND IN NO WAY IS MEANT TO IMPLY THAT FLEET PARTS' ITEMS ARE AUTHORIZED OR IN ANY WAY AFFILIATED WITH THOSE MANUFACTURERS.

Part 00050 - Kidron FRP Base & Slat Spacer 105.5”

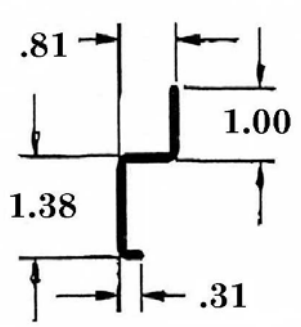

Part 05020- Kidron Vertical Connector for Aluminum Body

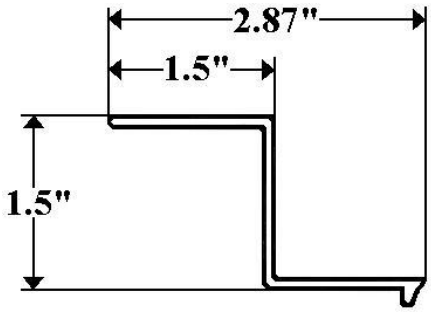

Part 432-2D (107”)- Kidron Aluminum Side Z-Post

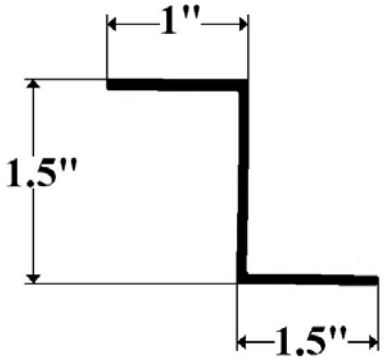

Part 500-1D - Kidron Dry Freight Roof Bow 9” Radius New Style 91”

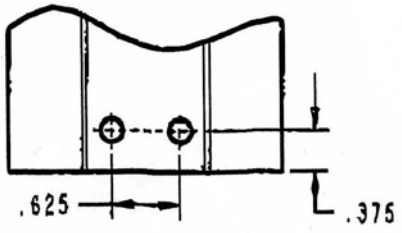

Part 500-1E - Kidron Dry Freight Roof Bow 9” Radius New Style 97”

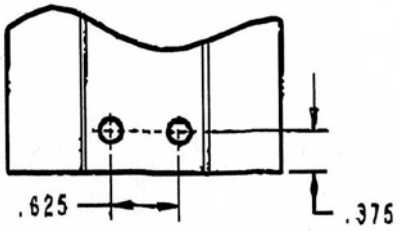

Part 1014- Corner Radius New Style Dry Freight

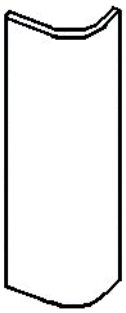

1014 16.687 X 96”
1014/102 16.687 X 102”

Used with FP5100R&L Plastic Corner Caps

Kidron Dry Freight Roof Radius for Plastic Corner Caps (FP5100L & FP5100R)

2012M 20-5/8” X 79-3/8” For 96” Wide Body

2012M2 20-5/8” X 85-3/8” For 102” Wide Body

Part 5002- Top Rail Kidron

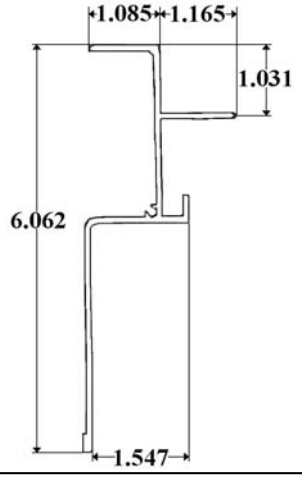

Part 5003- Bottom Rail Kidron

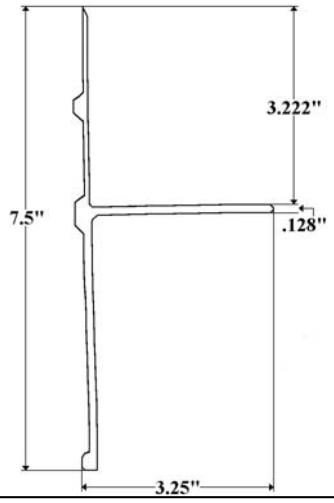

Part 5004- Kidron New Dry Freight Top Rail

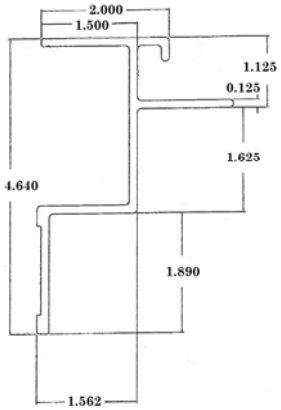

Part 5005 - Kidron Bottom Rail Cargo Star Dry Freight

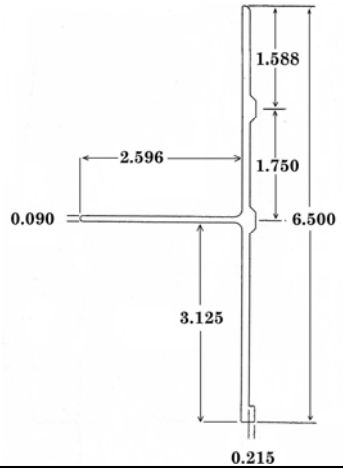

Part 5010E (97.37") & 5010E/109 (109.37")- Kidron Corner Radius Extruded

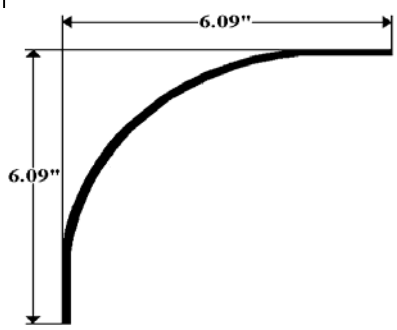

5010E OEM # 111026

5010E/109 OEM # 111027

Dry Freight & Reefer

Part 5012E (91.5”)- Kidron Roof Radius Extruded *Reefer Body*

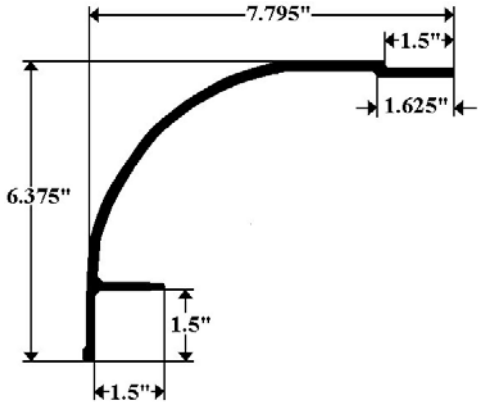

Fits 96” &102” Bodies

Part 5012M & M2- Kidron Roof Radius Mitred Corners, Dry Freight Body

M-96” Wide Body
M2-102” Wide Body

Part DB/MERRITT-24 -- Dock Bumper

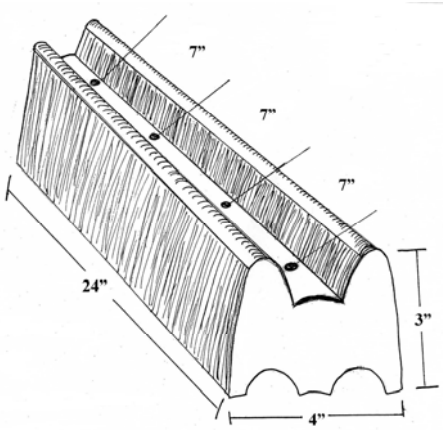

Solid Dock Bumper

4 Holes on 7” Centers

Weight 9.5lbs

Kidron OEM # K930349

Part DB2 -- Dock Bumper

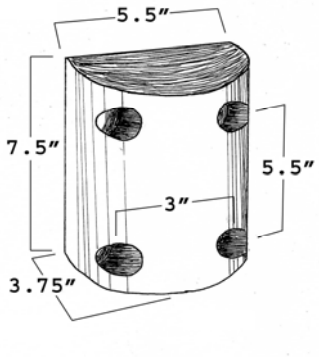

OEM # 93003

Part DB6-24S -- Dock Bumper Solid “D”

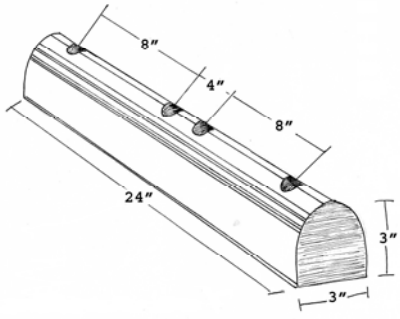

Kidron OEM # K946741

Part FP5000L- Kidron Left/Front Reefer Cap

OEM # 921319

Part FP5000R- Kidron Right/Front Reefer Cap

OEM # 921318

Part FP5010L- Kidron Left/Front Reefer Cap New Style

Part FP5010R- Kidron Right/Front Reefer Cap New Style

Part FP5100L– Kidron L/F Plastic Cap

OEM # K945912

Part FP5100R– Kidron R/F Plastic Cap

OEM # K945911

Part FP5500L- Kidron L/F Cap Dry Freight

OEM # 921313

Part FP5500R- Kidron R/F Cap Dry Freight

OEM # 921311

Part KI2– Kidron Rear Rear Rain Gutter

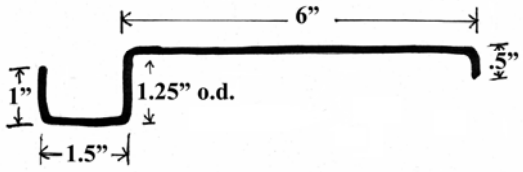

Part S332-2D (97”) & 2E (108”)– Front Wall Post

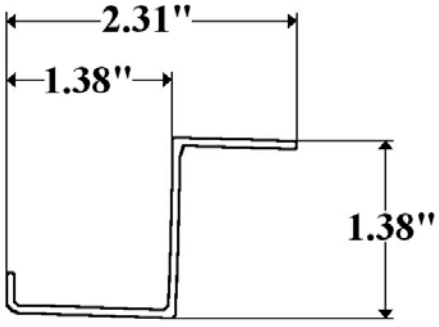

Punched 2” Centers

Part S3022-Kidron Roof Bow

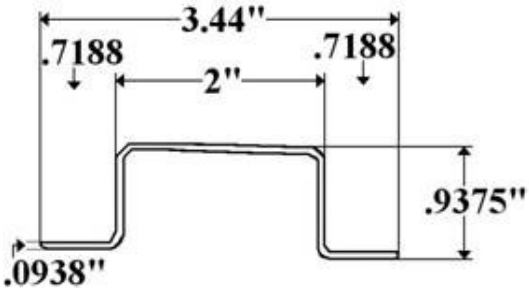

Marathon/ Metro/ Satellite Body Parts Quick Reference Guide

Notes:

DISCLAIMER

USE OF OEM OR MANUFACTURERS' NAME AND/OR PART NUMBERS IS FOR IDENTIFICATION PURPOSES AND SIMPLIFICATION ONLY AND IN NO WAY IS MEANT TO IMPLY THAT FLEET PARTS' ITEMS ARE AUTHORIZED OR IN ANY WAY AFFILIATED WITH THOSE MANUFACTURERS.

Part 3912W (White)- Marathon Roof Radius

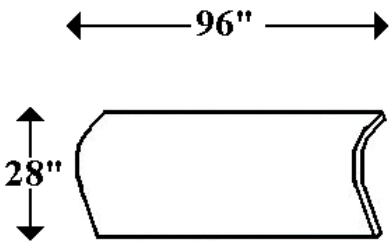

Part 932-2E- Marathon Steel Z Post 1-13/16" X 107-7/8" ***Punched 3" Centers***

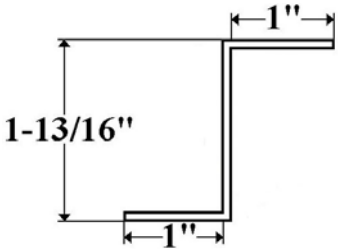

Part 9902- Marathon Top Rail

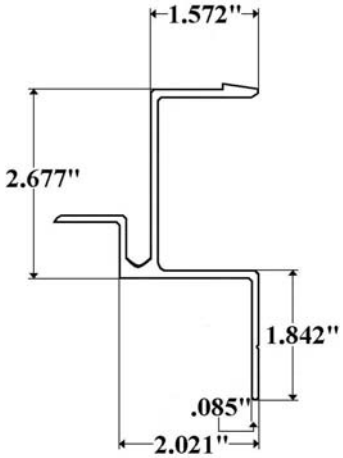

Part 9903F- Marathon Bottom Rail ***FRP Body***

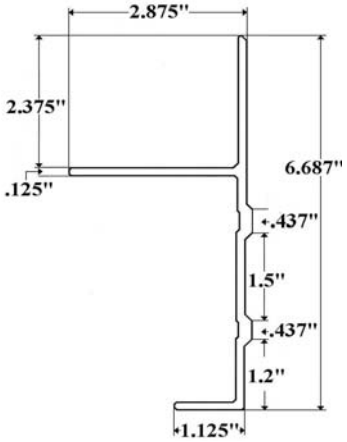

Part 9904– Marathon Bottom Rail ***Aluminum Body***

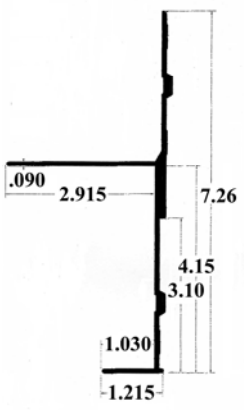

Part 9910E (108")- Marathon Front Corner Post

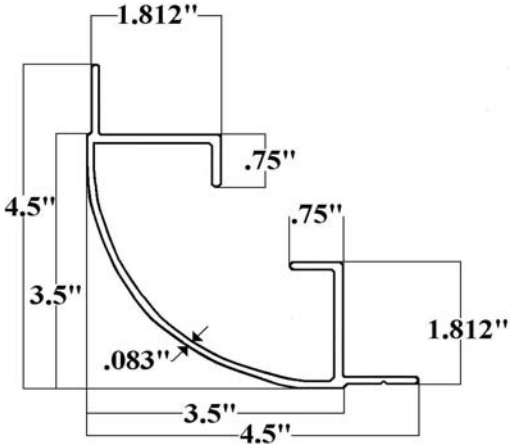

Part FP9900AF- Marathon Rear Corner Cap

Part FP9900L- Marathon Left/Front Corner Cap

Part FP9900R- Marathon Right/Front Corner Cap

Part FP9950L- Marathon Left/Front Corner Cap *New Style*

Part FP9950R- Marathon Right/Front Corner Cap *New Style*

Note: **FP9950R and FP9950L use the Marker Light Part PM108A.**

Part PM108A (Amber)
Part PM108R (Red)
Marker Light

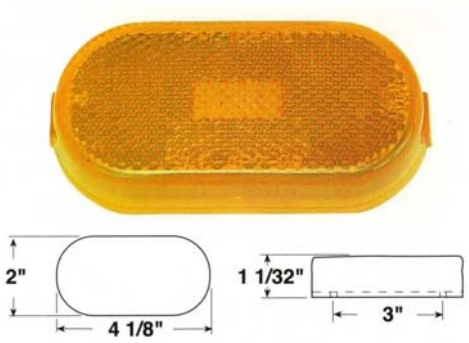

Part S9922- Marathon Steel Hat Roof Bow
1-3/4" X 98-7/8"

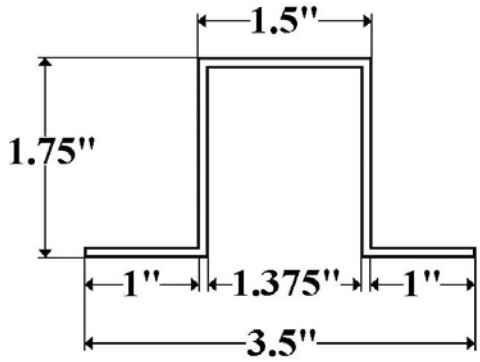

Part VSM1030A & R-
2" Sealed Lamp

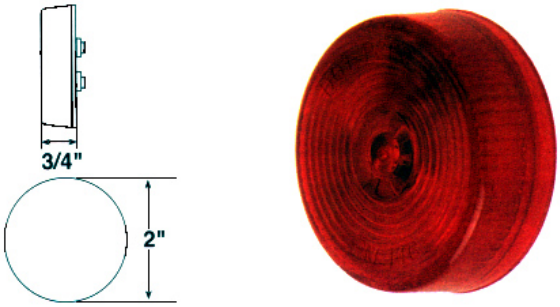

Part VSM9239-
Mount Kit for 2" Sealed Lamp

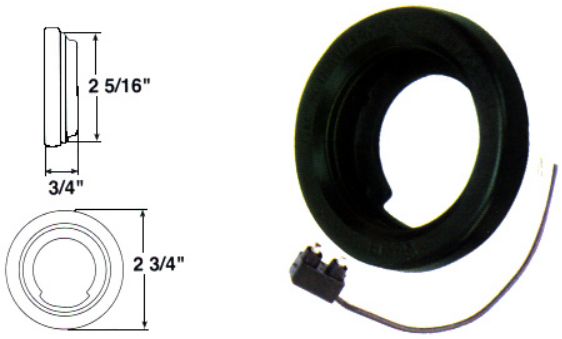

Mickey Body Parts Quick Reference Guide

Notes:

DISCLAIMER

USE OF OEM OR MANUFACTURERS' NAME AND/OR PART NUMBERS IS FOR IDENTIFICATION PURPOSES AND SIMPLIFICATION ONLY AND IN NO WAY IS MEANT TO IMPLY THAT FLEET PARTS' ITEMS ARE AUTHORIZED OR IN ANY WAY AFFILIATED WITH THOSE MANUFACTURERS.

Part 06020- 108” Mickey Connector

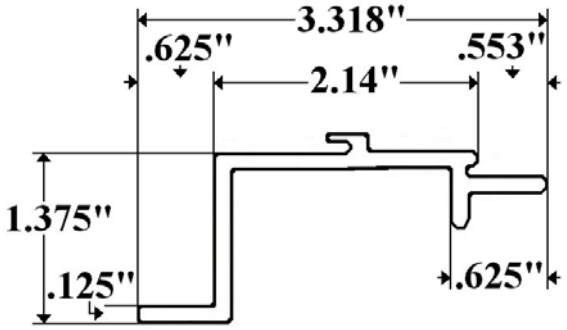

Part 332-2D (97”), 2E (108”) & 2F (112”)- Aluminum Z-Post Mickey

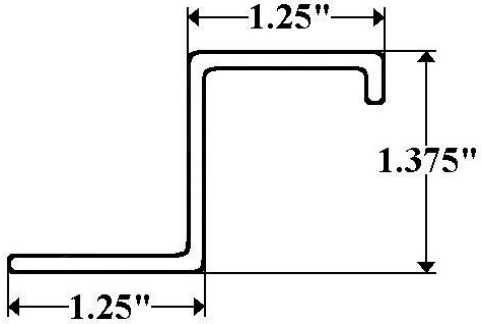

Part 421-1D (92”) & 1E (98”)- Mickey Roof Bow

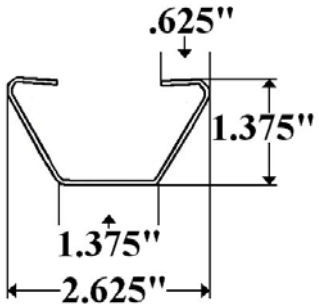

Part 427-1 (98”)- Starter Bow Mickey

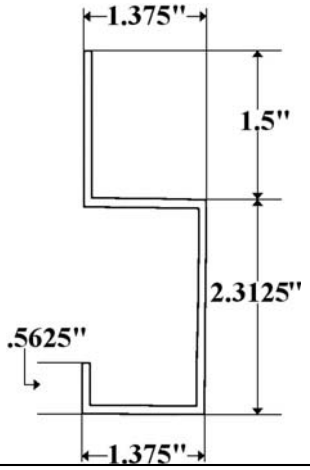

Part 531- End Cap

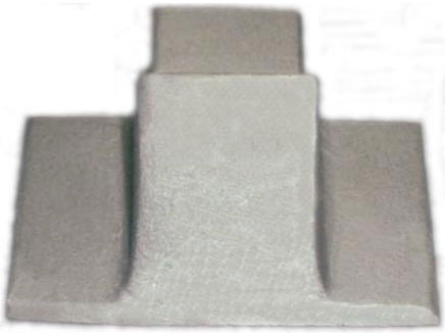

For RR531 Extrusion

Part 6002- Mickey Top Rail

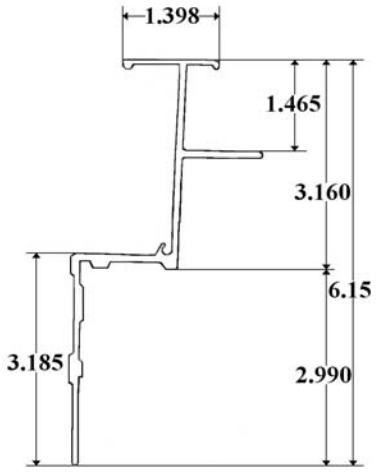

Part 6003- Mickey Bottom Rail

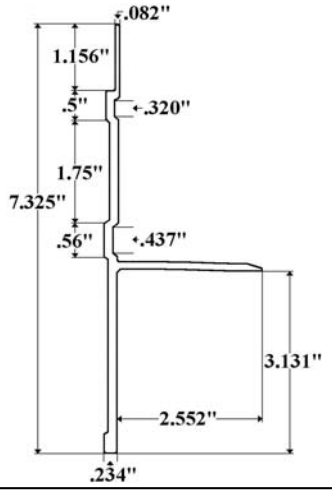

Part 6010E (106")- Mickey Front Corner Post

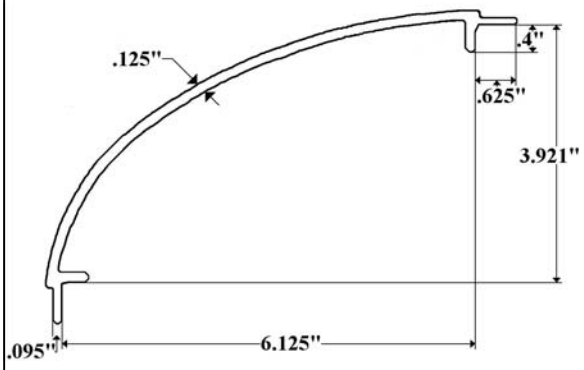

Part 6012M- Mickey Roof Radius Fits bodies up to 102" wide

15-1/4" X 91"

Part DB2 -- Dock Bumper

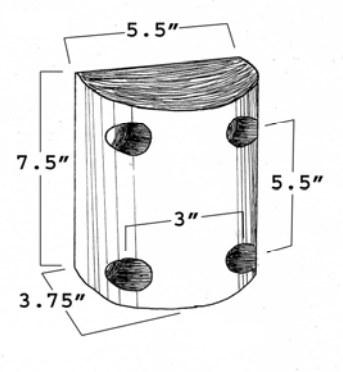

OEM # 7200643

Part FP6000L- Mickey Left/Front Cap

Obsolete use FP6500L

Part FP6000R- Mickey Right/Front Cap

Obsolete use FP6500R

Part FP6500L- Mickey Left/Front Corner Cap

Part FP6500R- Mickey Right/Front Corner Cap

Part RR531/24 (24') & RR531/28 (28')- RUB Rail

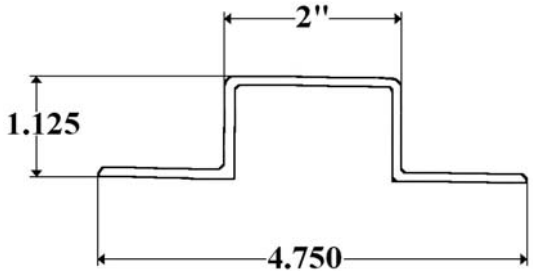

Uses Casting #531

Part S332-2D (97") & 2E (108")- Steel Z Post Mickey

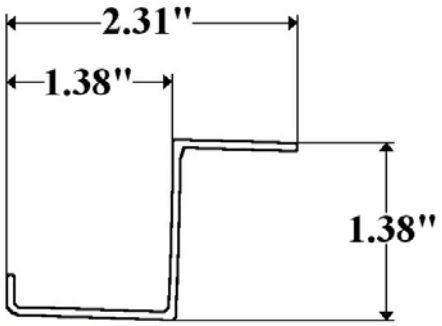

Punched 2" Centers

MICKEY SIDE DOOR HINGE

Part P2408AS 8" Aluminum with Stainless Steel Pin

Modern Wagon Body Parts Quick Reference Guide

Notes:

DISCLAIMER

USE OF OEM OR MANUFACTURERS' NAME AND/OR PART NUMBERS IS FOR IDENTIFICATION PURPOSES AND SIMPLIFICATION ONLY AND IN NO WAY IS MEANT TO IMPLY THAT FLEET PARTS' ITEMS ARE AUTHORIZED OR IN ANY WAY AFFILIATED WITH THOSE MANUFACTURERS.

Part 390-1D (93”) & 1E (99”)- Modern Wagon Roof Bow

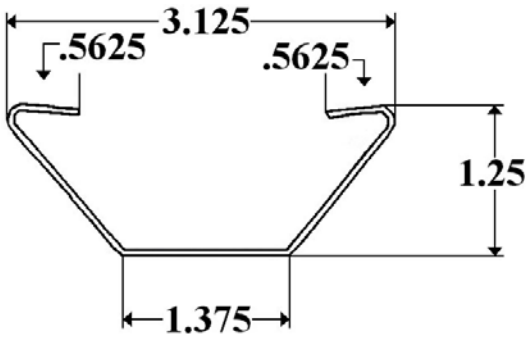

Part 3902- Modern Wagon Top Rail

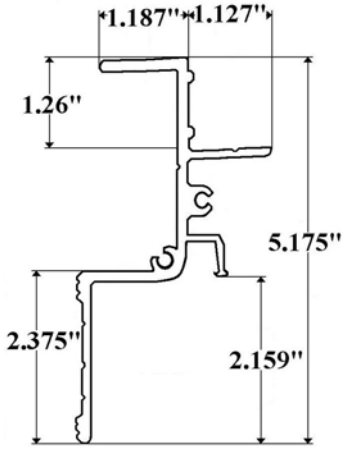

Part 3910E- Modern Wagon Corner Radius

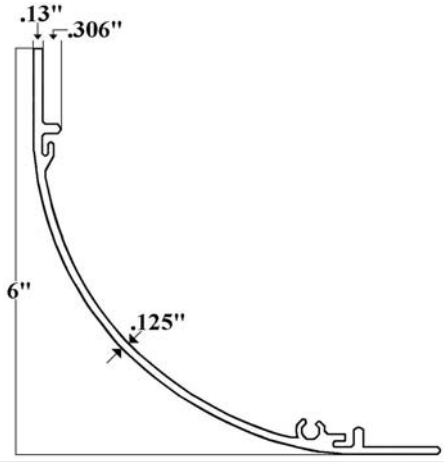

Part 3912W (White)- Modern Wagon Roof Radius

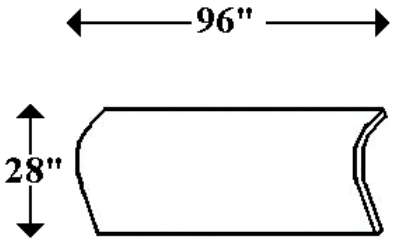

Part FP3900L- Modern Wagon
Left/Front Corner Cap

Part FP3900R- Modern Wagon
Right/Front Corner Cap

Part S2022- Modern Wagon
Replacement Starter Bow & Side Post

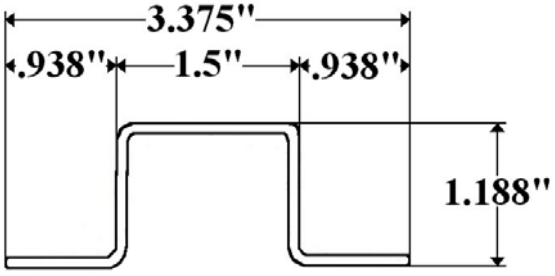

Morgan Body Parts Quick Reference Guide

Notes:

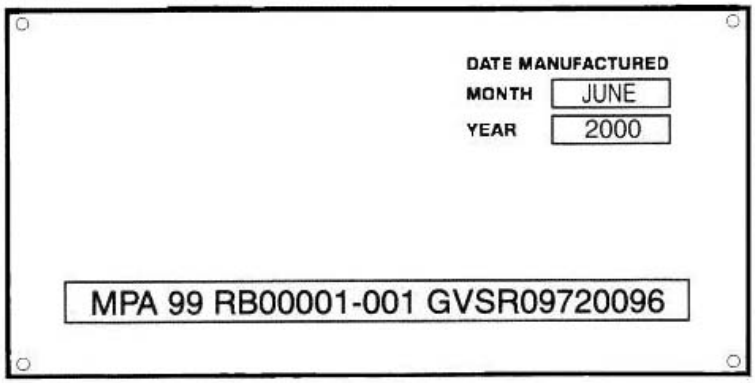

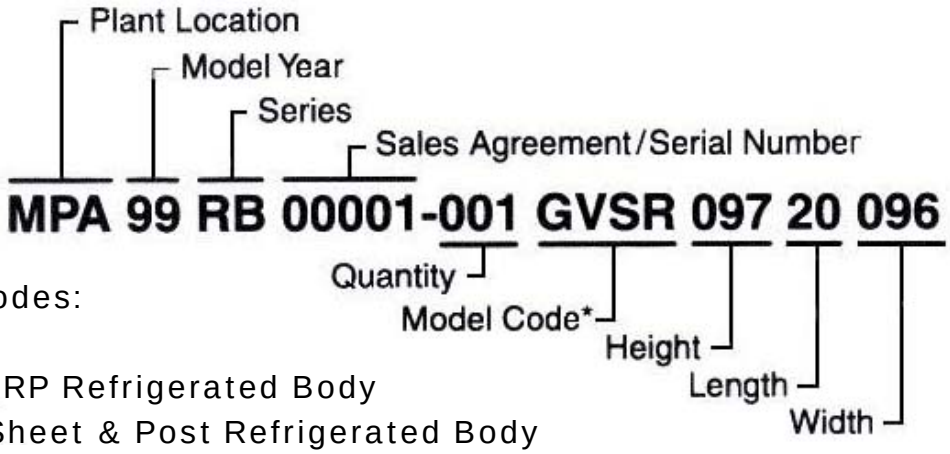

* Model Codes:

GVFR — FRP Refrigerated Body
GVSR — Sheet & Post Refrigerated Body
GVSD — Sheet & Post Dry Freight Body
GVSD — FRP Dry Freight Body
GVCD — Curtain Side
GVMD — Dura-Plate
PVFD & PDB — Parcel Van

Roof Bows

1-3/8” Used Thru 3/97

1” Used From 4/97

DISCLAIMER

USE OF OEM OR MANUFACTURERS’ NAME AND/OR PART NUMBERS IS FOR IDENTIFICATION PURPOSES AND SIMPLIFICATION ONLY AND IN NO WAY IS MEANT TO IMPLY THAT FLEET PARTS’ ITEMS ARE AUTHORIZED OR IN ANY WAY AFFILIATED WITH THOSE MANUFACTURERS.

Part 01020- Morgan Vertical Connector GVSD

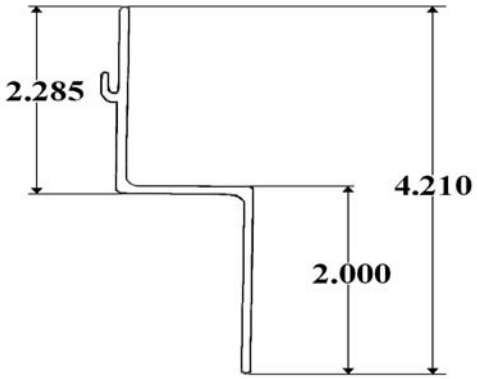

OEM # 00165

Part 01021- Morgan Vertical Connector GVFD

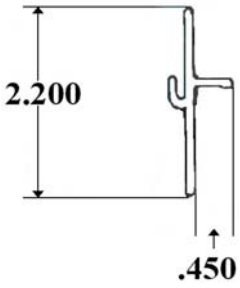

OEM # 001481

Part 01025- Morgan Horizontal Connector GVSD

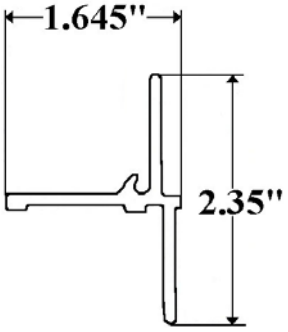

OEM # 14142

Part 01026- Morgan Horizontal Connector GVFD

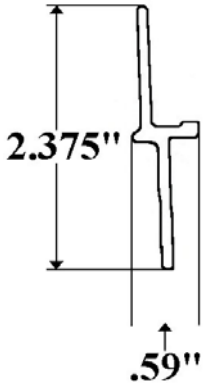

OEM # 6900146

Part 1001- Morgan Top Rail GVSD Aluminum Body*As of 10/2008*

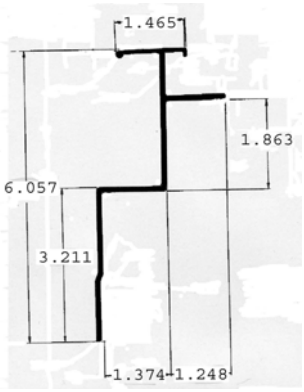

OEM # 00015904

Part 1001F- Morgan Top Rail GVFD FRP Body*As of 10/2008*

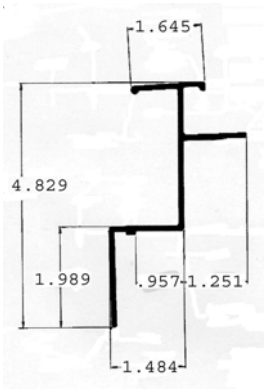

OEM #

Part 1002- Morgan Top Rail 1-3/8" Roof Bow GVSD *Thru 3/97*

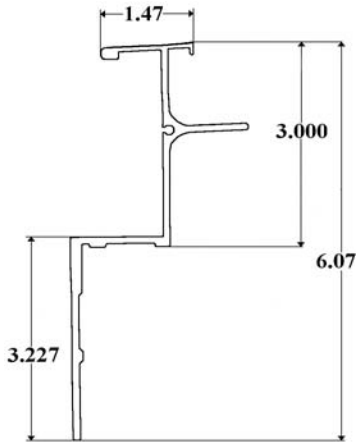

Part 1002F- Morgan Top Rail 1-3/8" Roof Bow GVFD *Thru 3/97*

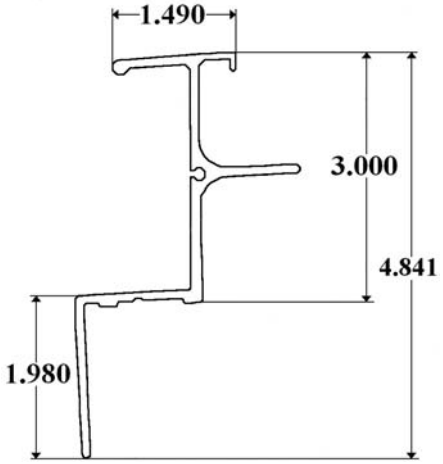

Part 1003- Morgan Bottom Rail GVFD & GVSD

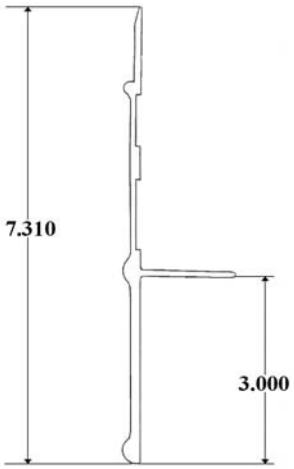

Part 1005- Morgan Bottom Rail GVFD *New Style*

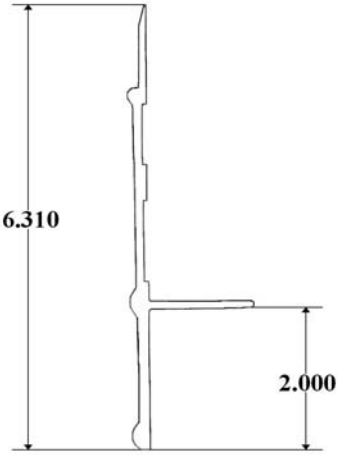

Part 1006- Morgan Top Rail GVSD *New Style* 1" Roof Bow

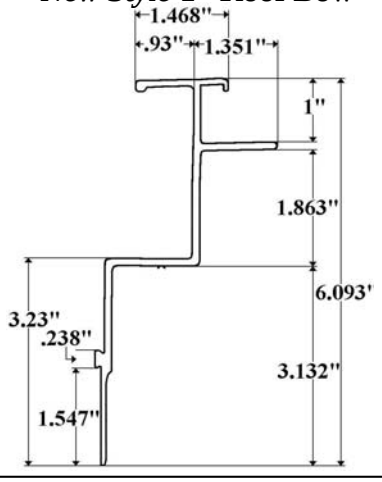

Part 1006F- Morgan Top Rail GVFD *New Style* 1" Roof Bow

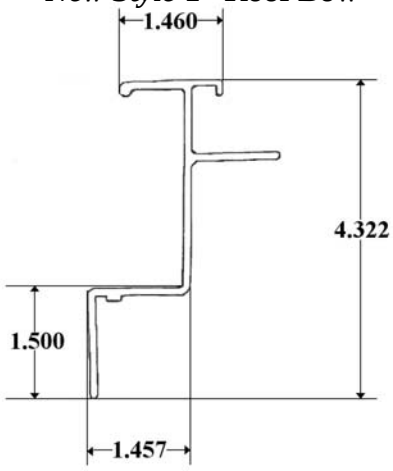

Part 1007F- Morgan Top Rail GVFD
1" Roof Bow *New for 2003*

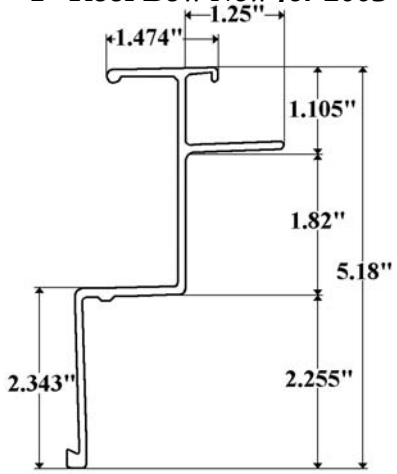

Part 1008F- Morgan Bottom Rail GVFD
From 97 to Present

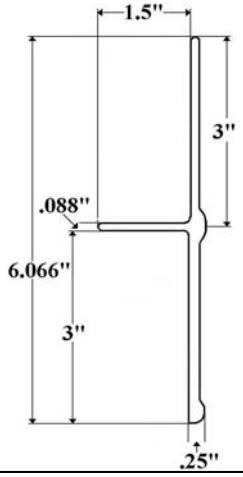

Part 1009- Morgan Top Rail GVSD
1" Roof Bow *From 4/97*

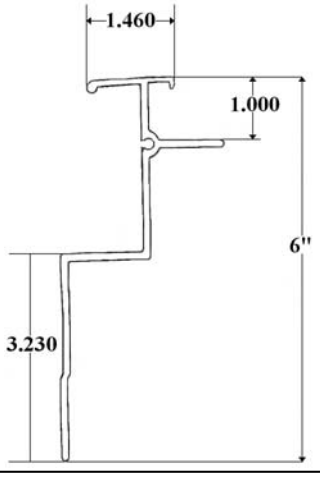

Part 1009F- Morgan Top Rail GVFD
1" Roof Bow *From 4/97*

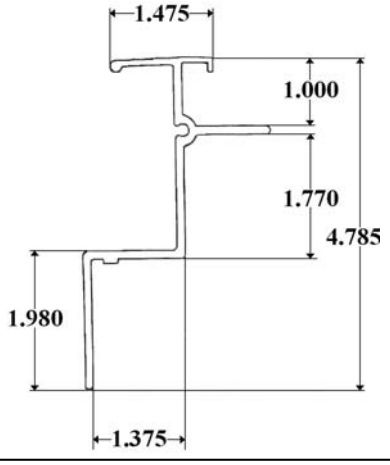

Part 1050/92 (92”) & 98 (98”)-
1-3/8” Morgan Starter Bow

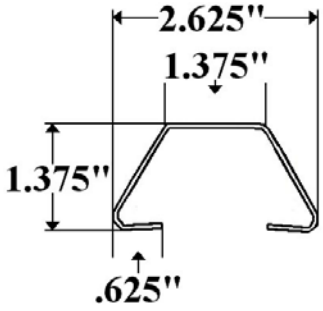

Reverse Arch

Part 1050/92M (92”) & 98M (98”)-
1-3/8” Morgan Starter Bow with Tab

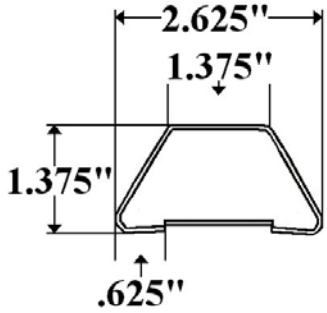

Reverse Arch

Part 1050/92-1 (92”) & 98-1 (98”)-
1” Morgan Starter Bow

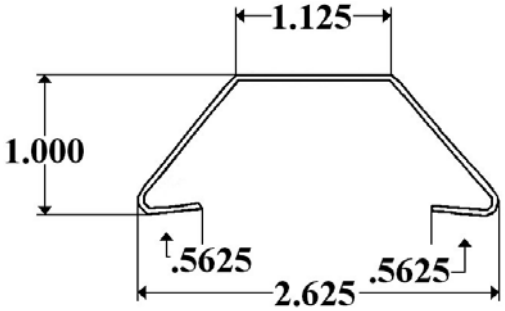

Reverse Arch

Part 1050/92-1M (92”) & 98-1M (98”)-
1” Morgan Starter Bow with Tab

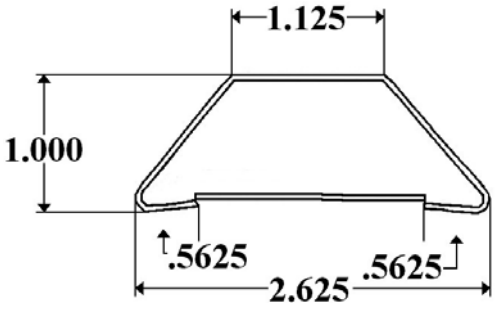

Reverse Arch

Part 420-1D (92”) & 1E (98”)-
1” Morgan Roof Bow

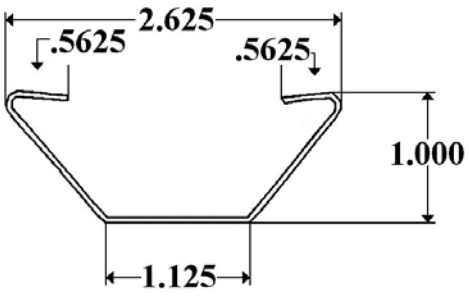

Part 421-1D (92”) & 1E (98”)–
1-3/8” Morgan Roof Bow

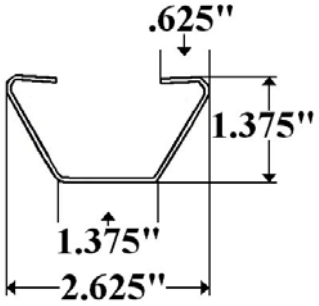

Part FF/MOR/GM
Fuel Filler Neck Housing, Morgan GMC Round

Part FP1000L– Morgan Left/Front Cap

Part FP1000R– Morgan Right/Front Cap

Part FP1050L– Morgan Left/Front Mini-Cap

Part FP1050R- Morgan Right/Front Mini-Cap

Part FP1100L- Morgan Plastic
Left/Front Cap

Mounts behind Corner Radius and under Roof Radius

Part FP1100R- Morgan Plastic
Right/Front Cap

Mounts behind Corner Radius and under Roof Radius

Part FP1200L- Morgan Plastic
Left Front Cap
2002 Version

Mounts over Corner Radius and over Roof Radius

Part FP1200R- Morgan Plastic
Right Front Cap
2002 Version

Mounts over Corner Radius and over Roof Radius

Part 521-1D (91”) & 521-1E (97”)-
Roof Bow Supreme

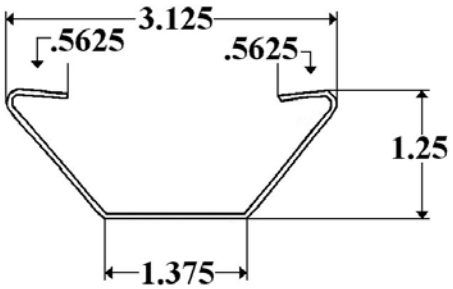

Old Style — Obsolete — see adjacent

Part 521-1D (91”) & 521-1E (97”)-
Roof Bow Supreme New Style

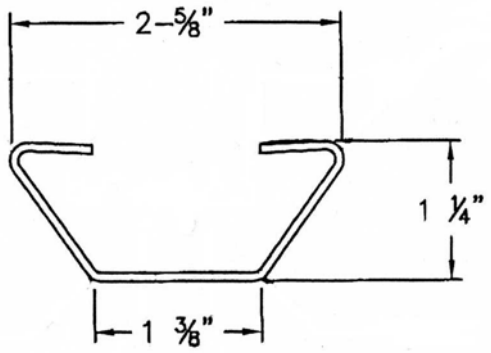

Part 2316 PCG & PCW- Supreme Hinge
Powder Coated Grey
Powder Coated White

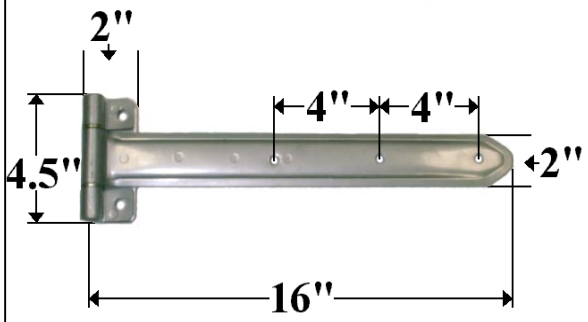

Part 2310 PCG & PCW- Supreme Hinge
Powder Coated Grey
Powder Coated White

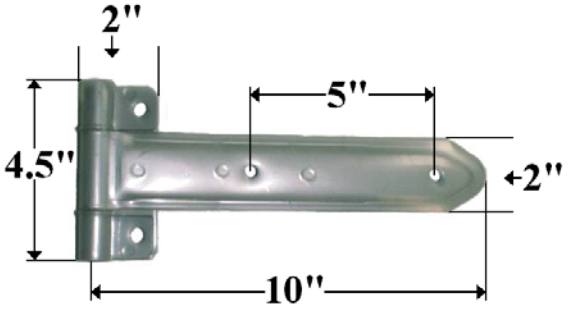

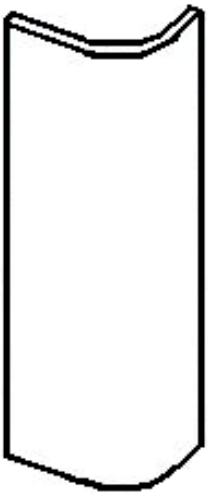

Supreme Corner Radius
M-Mill
S-Stainless (through 1998)
E-Extruded (1999 on)

2010E 12” X 103.5”

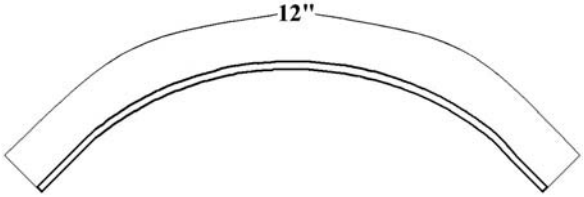

2010S 11-3/4” X 96” ***Punched 4” Centers***

2010S/108 11-3/4” X 108” ***Punched*** 4” Centers

Supreme Roof Radius ***Punched 2” Centers***
M-Mill S-Stainless PY-Penske Yellow

2012M	**20-5/8” X 79-3/8”**	**For 96”**	**Wide Body**
2012M2	**20-5/8” X 85-3/8”**	**For 102”**	**Wide Body**
2012S	**20-5/8” X 79-3/8”**	**For 96”**	**Wide Body**
2012S2	**20-5/8” X 85-3/8”**	**For 102”**	**Wide Body**
2012PY	**20-5/8” X 79-3/8”**	**For 96”**	**Wide Body**
2012PY2	**20-5/8” X 85-3/8”**	**For 102”**	**Wide Body**

Part RC101– Morgan Rear Cap

Part RC6943– Morgan Rear Casting

Part RR531- Morgan RUB Rail

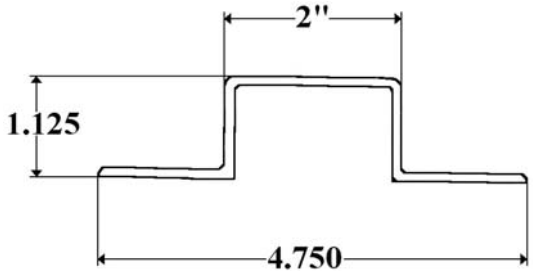

Uses Casting #531

Part 531- Morgan End Cap

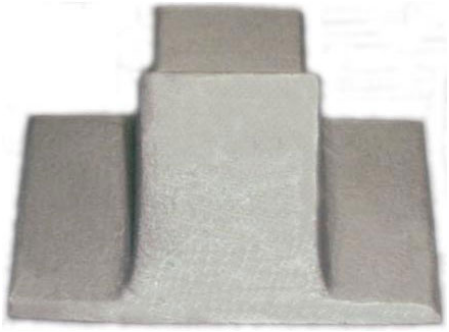

For RR531 Extrusion

Part RR1000- RUB Rail Morgan
New Style

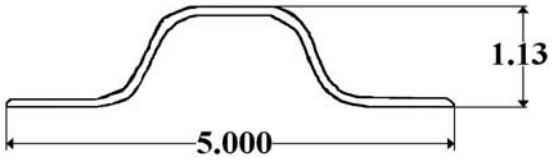

Use with 6971 End Cap

Part 6971- Morgan End Cap

For RR1000 Extrusion

Part 1010- Morgan Corner Radius

M-Mill P-Polished S-Stainless

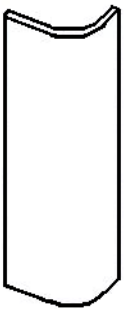

1010M 15.28 X 96”
1010M/104 15.28 X 104”
1010P 15.28 X 96”
1010P/104 15.28 X104”
1010S 15.28 X 96”
1010S/104 15.28 X104”

Part 1012- Morgan Roof Radius

M-Mill P-Polished S-Stainless
PY– Penske Yellow

1012M 19.28 X 80.88
1012M2 19.28 X 86.88
1012P 19.28 X 80.88
1012P2 19.28 X 86.88
1012S 19.28 X 80.88
1012S2 19.28 X 86.88
1012PY2 19.28 X 86.88

Part 1014- Morgan Corner Radius

M-Mill

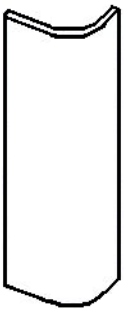

1014 16.687 X 96”
1014/102 16.687 X 102”

Used on Penske Bodies

Part 1015M- Roof Radius Morgan Family Van

Used with FP1050R&L Corner Caps

11-1/2 X 70-7/8 Mill *Punched 4” Centers*

Part 1016M– Parcel Del Van Morgan Corner Radius

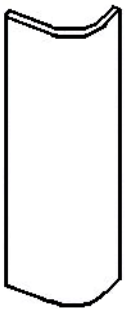

1016M 16.75 X 88”

Part 066592 White

92” Wide
066592P (Penske Yellow)

Part 066593White

96” Wide

Part 066450

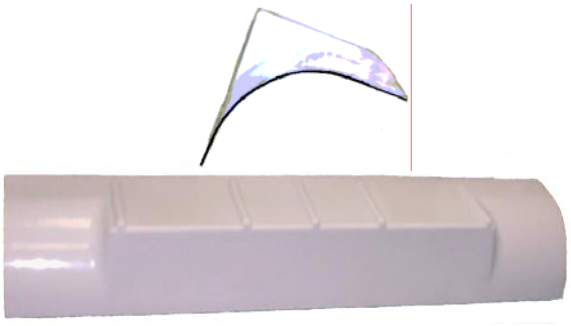

Reefer Dormer White
Fits 96” or 102” Wide Bodies

Part 066586F (Silver), 066586W (White), 066583F (Penske Yellow)

96” Wide

Fits Aluminum or FRP Bodies

Part GR3-1—Morgan Parcel Delivery Van Rear Corner Post

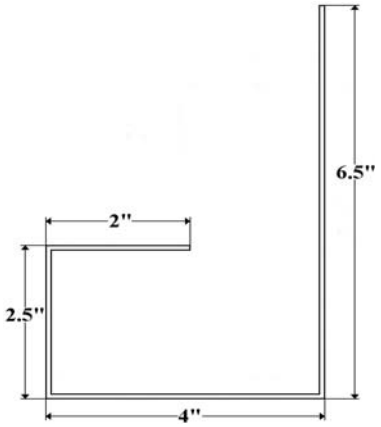

Part MO1- Morgan Rear Header

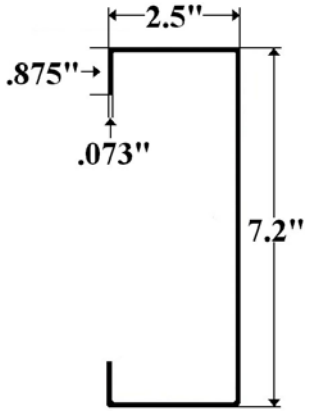

Also Available in Stainless MO1S

Part MO1SR- Morgan Reefer Rear Header 96” Stainless Steel

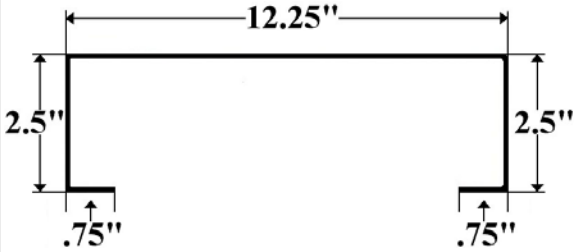

Also Available in HR Steel MO1R

Part MO2 (96”) & MO2/102 (102”)- Morgan Rear Rain Gutter

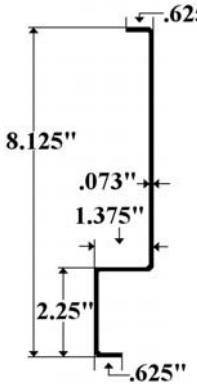

Also Available in Stainless MO2S & MO2S/102

Part MO3/108 (108”)- Morgan Rear Corner Post

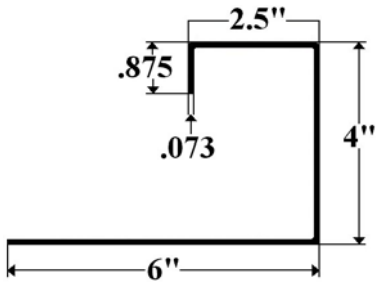

Also Available in Stainless MO3S/108

Part MO3/INSERT—Reinforcement Inside Morgan Rear Corner Post 108”

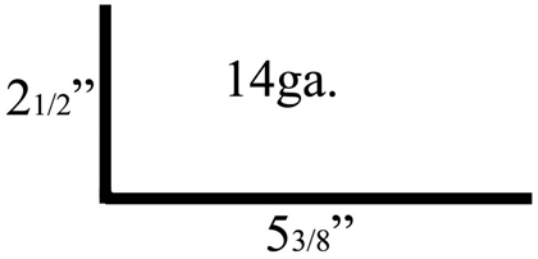

Part MO3-1 (96”)- Morgan Rear Corner Post Offset to Outside

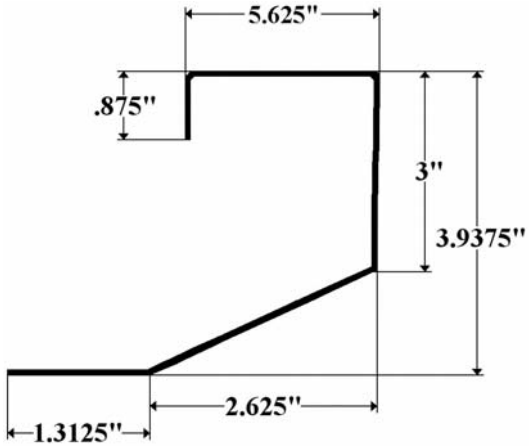

Part MO5S (108”)- Morgan Stainless Steel Reefer Rear Corner Post

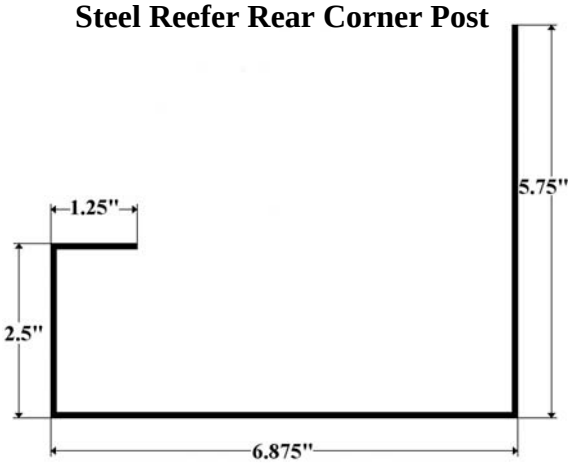

Also Available in HR Steel MO5

Part 4141- Hinge Morgan Side Door

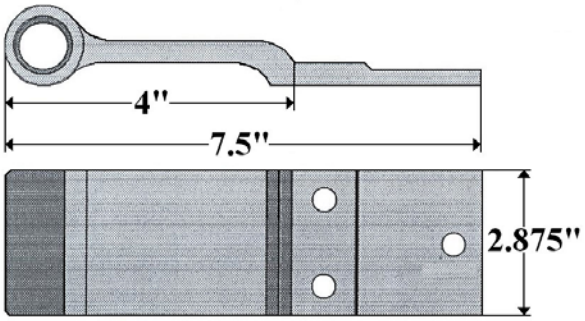

See 671 Butt
See 8730 Pin

Part 4161- Hinge Morgan Rear Door
Used as Side Door Hinge on Reefer Body

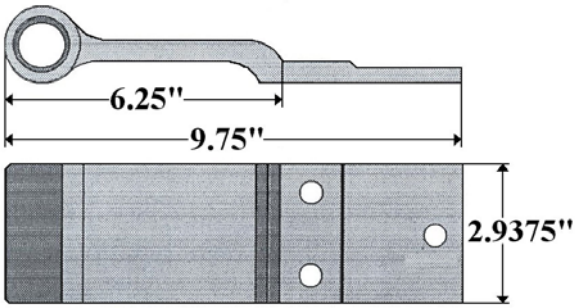

See 671 Butt
See 8730 Pin

Part 671- Morgan Hinge Butt

Used with 8730 Pin, 4141 & 4161 Hinge

Part 8730– Morgan Hinge Pin
(1/2" X 4-1/2")

Used with 4141 & 4161 Hinge & 671 Butt

Part 226- Morgan Hinge Butt
New Style

Part LN1/2-13 Nylon Lock Nut

Part 1/2 X 6 Cap Screw Plated Grade 5

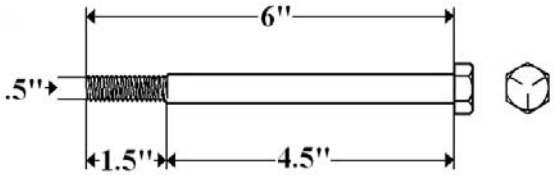

Used with 226 Hinge Butt

Part 00010 (97”) & 00010/108 (108”)– Steel Slat Spacer

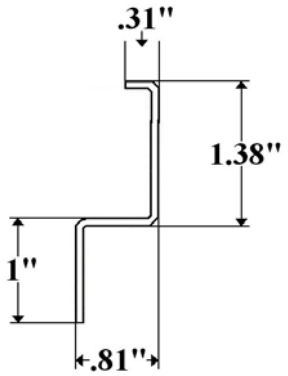

Used with Wooden Apitong Slats

Part 331-2– Morgan Reefer Roof Bow
1” Used From 4/97

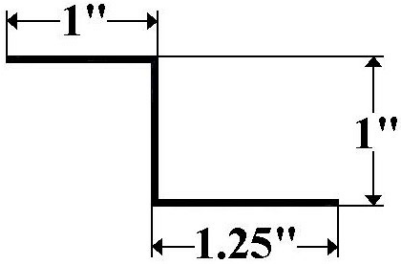

Part 332-2D (97”), 2E (108”) & 2F (112”)- Aluminum Z-Post Morgan

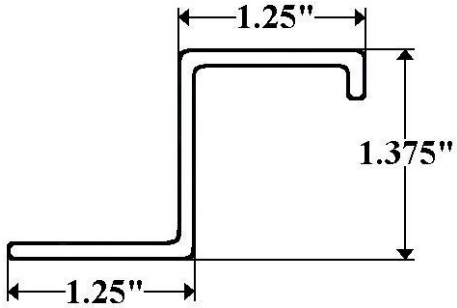

Also used as Roof Bow for Morgan Reefer *Thru 3/97*

Part S332-2D (97”) & 2E (108”)- Steel Z Post Morgan

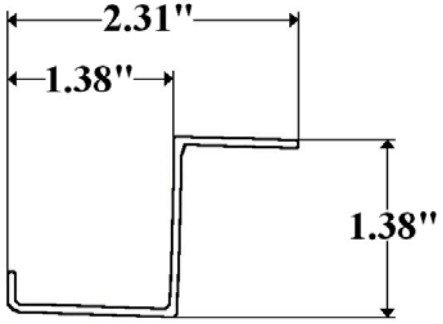

Punched 2” Centers

Part 1022- Aluminum Hat Post Morgan

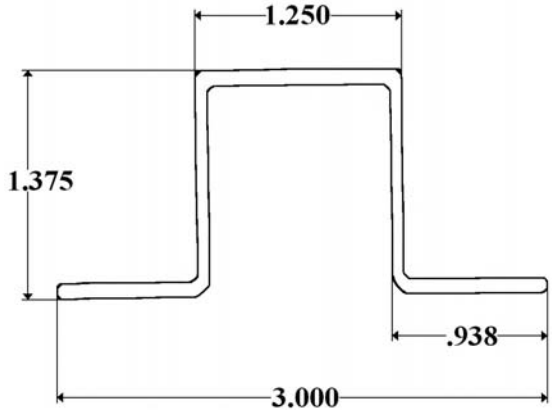

Part S1022 (107”)- Steel Hat Post Morgan

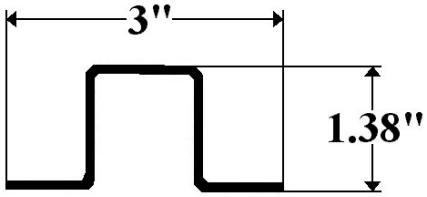

Punched 2” Centers

Part DB1 -- Dock Bumper

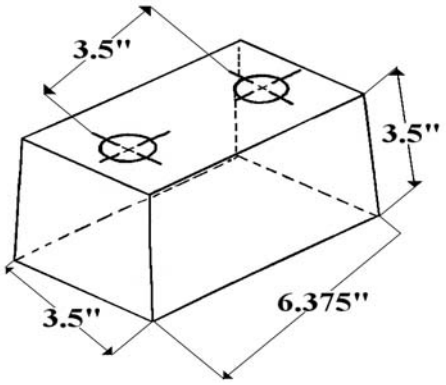

Morgan OEM # 07621

Part DB2 -- Dock Bumper

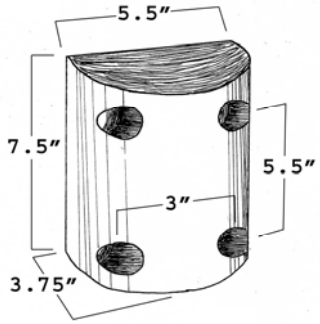

Morgan OEM # 07623

Part DB3-MOR — Dock Bumper

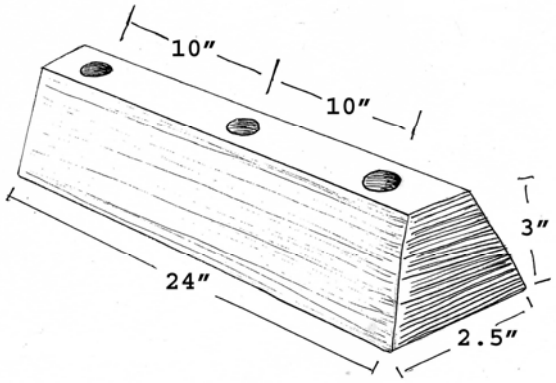

Morgan OEM # 076263

Part DB4 -- Dock Bumper

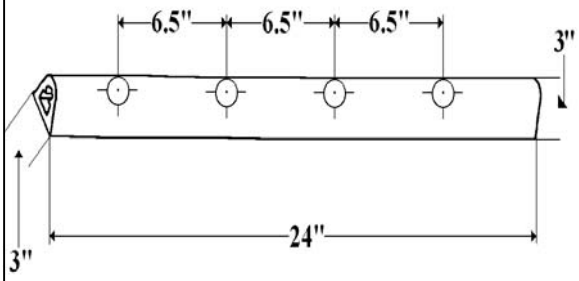

Part DB6-12S -- Dock Bumper Solid "D"

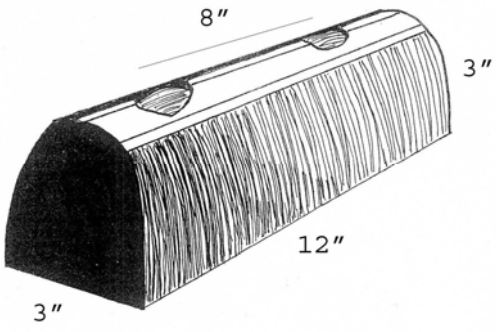

Morgan OEM # 076265

Part DB6-24S -- Dock Bumper Solid "D"

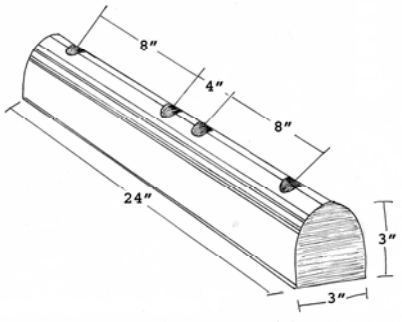

Morgan OEM # 076264

Part AB- Wooden Apitong Base

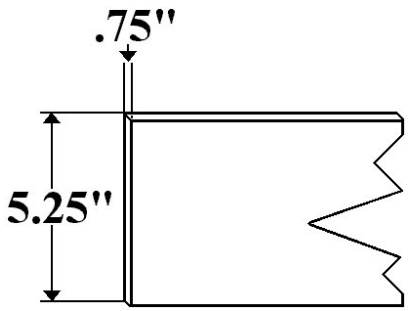

Part AS- Wooden Apitong Slat

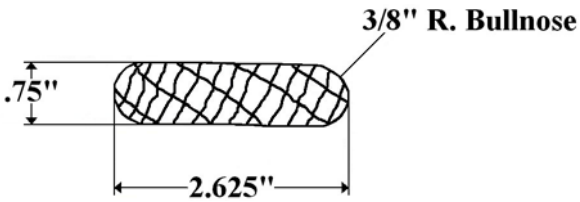

T-Nut

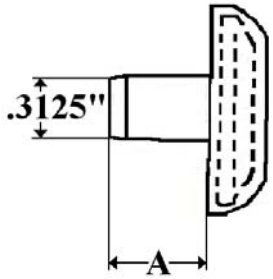

5/16-18X7/16 Grey
5/16-18X7/16 White
5/16-18X5/8 White

Ribbed T-Nut

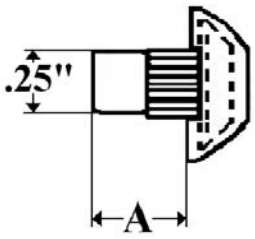

1/4-20 X 7/16 Grey
1/4-20 X 7/16 White
5/16-18-1/2 Grey
5/16-18-1/2 White

Barbed T-Nut

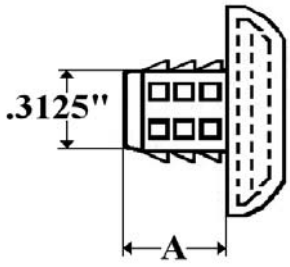

5/16 X 1/2 Barbed White

T-Nut Bolt

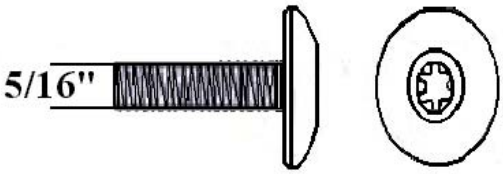

5/16-18X1/2" Torx HD
5/16-18X3/4" Torx HD
5/16-18X1" Torx HD

Washer Head Bolt

All with Patch

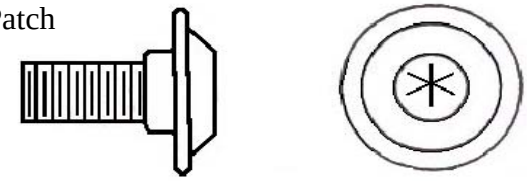

WHB1/4-20X1/2" Yellow
WHB1/4-20X1/2NS Yellow No Shoulder
WHB1/4-20X5/8" Green
WHB1/4-20X3/4" Blue
WHB1/4-20X1" Brown
WHB5/16-18X1/2" Yellow
WHB5/16-18X1/2NS Yellow No Shoulder
WHB5/16-18X5/8" Green

1/4" use TX 30 Bit 5/16" use TX 40 Bit

Camtainer Bolt

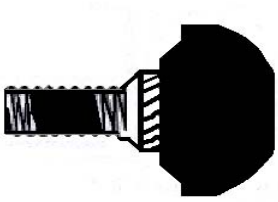

880-60411
880-60501
880-60718

All with Patch

Camtainer Nut

890-47000
890-48000
890-50000

Uses TX40 Bit

Supreme Body Parts Quick Reference Guide

Notes:

SUPREME MODEL NUMBER EXPLANATION CHART

VF_1 24_2 096_3 102_4

1 — BODY TYPE
2 — BODY LENGTH in feet
3 — BODY HEIGHT in inches
4 — BODY WIDTH in inches

BODY TYPE

VF- FRP DRY FREIGHT
SVF- FRP DRY FREIGHT Signature Series
VA- ALUMINUM DRY FREIGHT
SVA- ALUMINUM DRY FREIGHT Signature Series
IF- FRP DRY FREIGHT
IA- ALUMINUM DRY FREIGHT
VG- ALUMINUM REEFER

BODIES THRU-1998 USES 2010S (STAINLESS STEEL CORNER RADIUS)
FROM 1999 ON USE 2010E (EXTRUDED FRONT CORNER POST)

DISCLAIMER

USE OF OEM OR MANUFACTURERS' NAME AND/OR PART NUMBERS IS FOR IDENTIFICATION PURPOSES AND SIMPLIFICATION ONLY AND IN NO WAY IS MEANT TO IMPLY THAT FLEET PARTS' ITEMS ARE AUTHORIZED OR IN ANY WAY AFFILIATED WITH THOSE MANUFACTURERS.

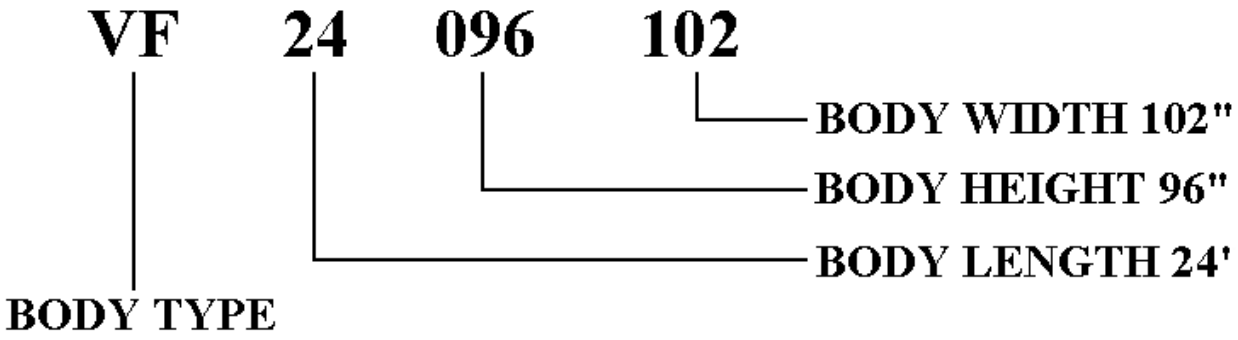
VF
24
096
102
BODY WIDTH 102"
BODY HEIGHT 96"
BODY LENGTH 24'
BODY TYPE

Part 2002- Supreme Upper Top Rail
VA or IA

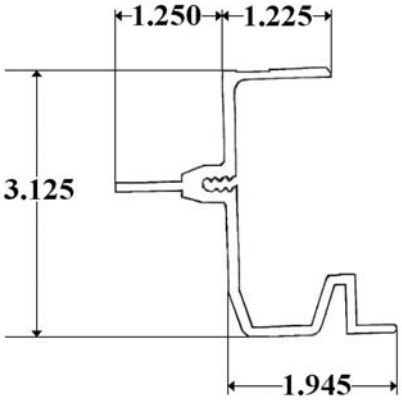

Lower Use Universal Rail (UR)

Part 2002F- Supreme Top Rail
VF or IF

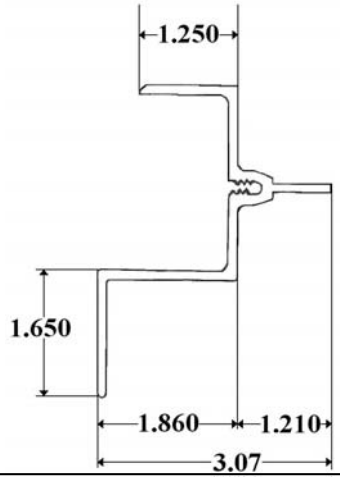

Part UR- Universal Rail Supreme-
Lower of 2 PC Top Rail
for Aluminum Body

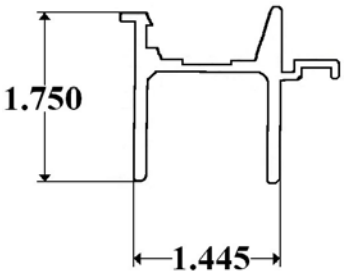

Rear Connector Aluminum Body,
Side Door Frame Aluminum Body

Part 2003- Supreme Bottom Rail
VA or IA

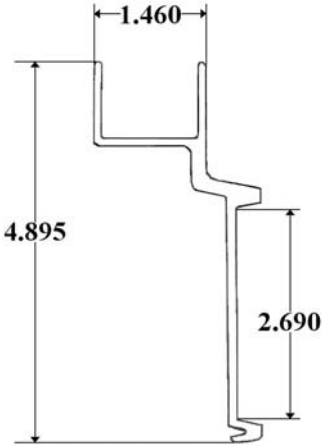

Part 2003F- Supreme Bottom Rail
VF or IF

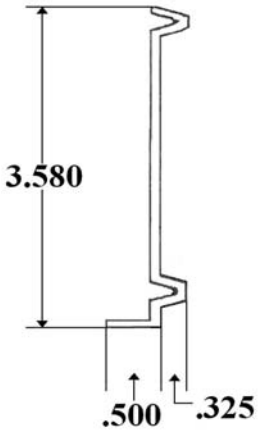

Part 2004F- Supreme Bottom Rail
VF or IF

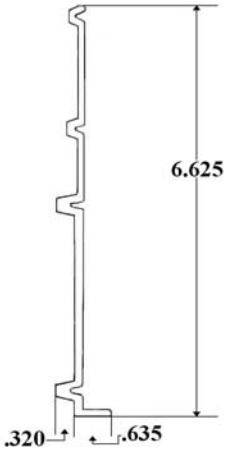

Part 2010MINI - Supreme Mini Front Corner Post Aluminum

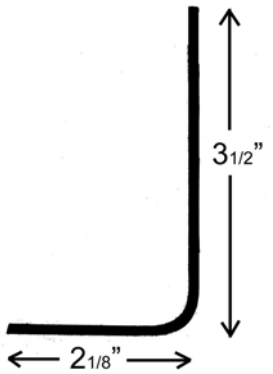

OEM # 002099700007

Part 02020- Supreme Front Vertical & Horizontal Connector VA & IA

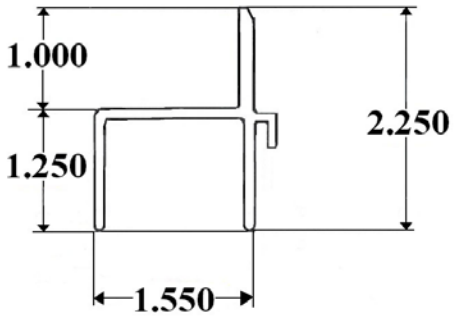

OEM # 002041001

Part 2009- Supreme Upper Top Rail Aluminum Body New Style

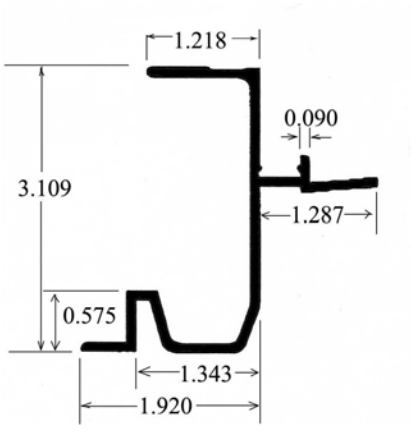

Part 2009F- Supreme Top Rail VF or IF

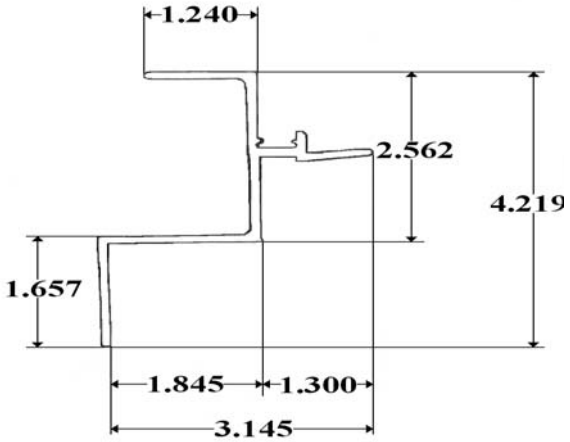

Part AB- Wooden Apitong Base

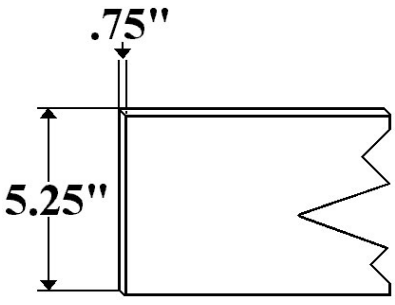

Part AS- Wooden Apitong Slat

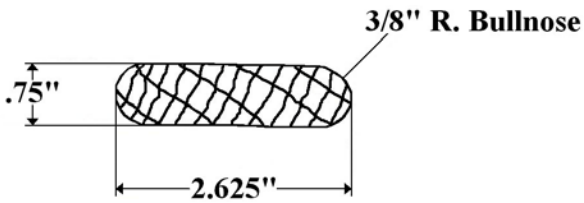

Part 1038- Supreme VF Rear Cap For Square Rear Corner Post

Part 1041– Supreme VA Rear Cap For Square Rear Corner Post

Part FF/SUP/GM
Fuel Filler Neck Housing, Supreme GM Square

Part FF/SUP/FORD
Fuel Filler Neck Housing, Supreme Ford Square

Part FP2000A- Supreme VA Rear Cap

Part FP2000F- Supreme VF Rear Cap

Part FP2000L- Supreme Left/Front Cap

Part FP2000R- Supreme Right/Front Cap

Part FP2000S– Supreme Spartan Body Front or Rear

Part S2022- Supreme Roof Bow Reefer Body

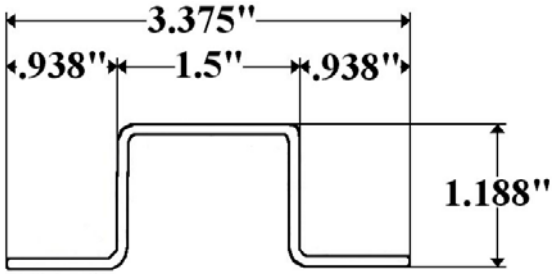

Part SU1– Supreme Rear Header

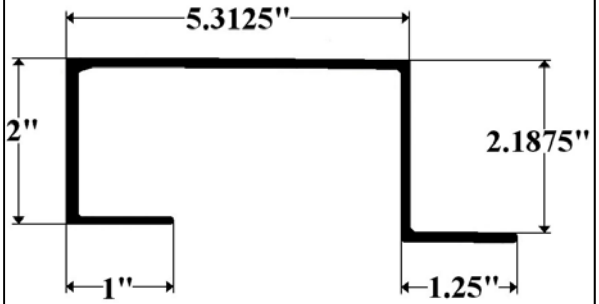

Part SU2- Supreme Rear Header

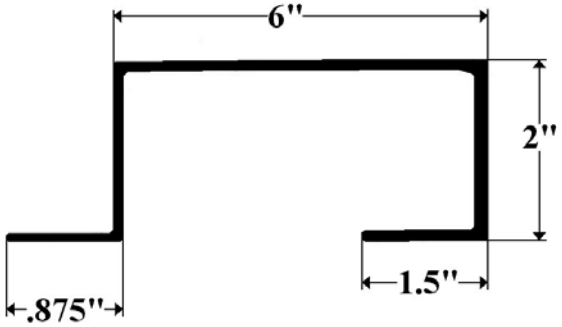

Part SU3– Supreme Rear Corner Post

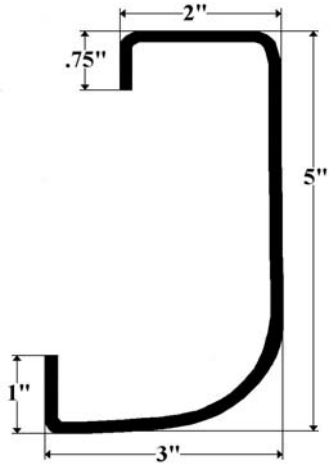

Part SU3-VAI (96")- Supreme Rear Corner Post Insert Aluminum Body

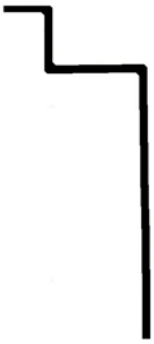

Used Inside SU3

Part SU3-VFI (96")- Supreme Rear Corner Post Insert FRP Body

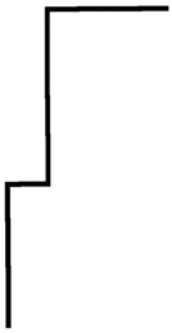

Used Inside SU3

Part SU4 - Supreme Mini Rear Corner Post Steel

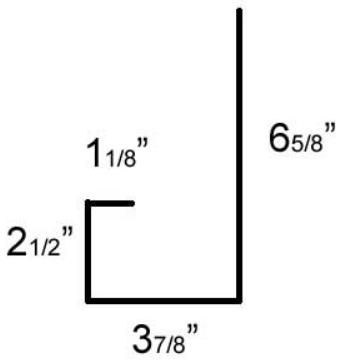

OEM # 015520938

Part SU5 - Supreme Rear Header Steel 4.25X96"

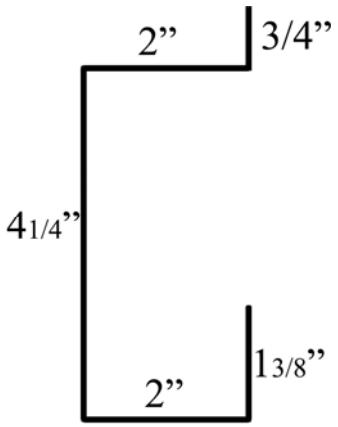

Part CGS- Supreme 1/4 H.D. Steel Rear Corner Gusset

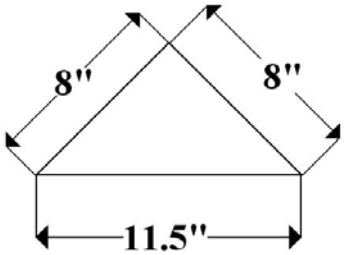

Part 2050/91 (91") & 97 (97")- Starter Bow Supreme

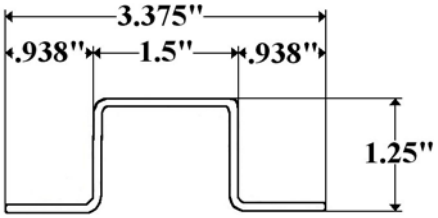

Part 232-2D (96"), 2E (108"), & 232-NH (108") *No Holes for FRP Body* Supreme Steel Z Post

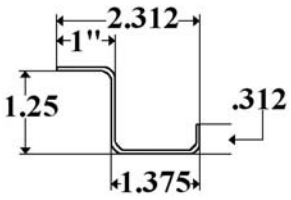

Punched on 3" Centers

Part DB6-12S -- Dock Bumper Solid "D"

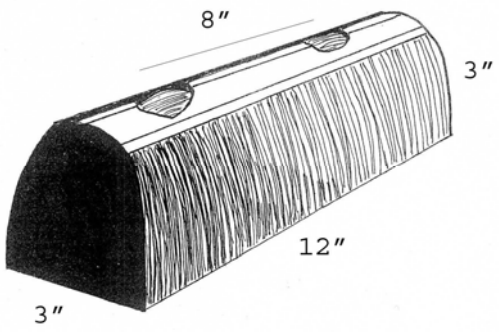

Morgan OEM # 076265

Part DB6-24S -- Dock Bumper Solid "D"

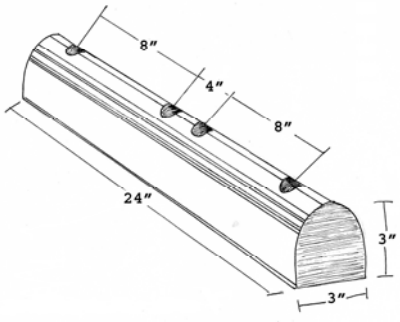

Supreme OEM # 255128

Part DB7-24

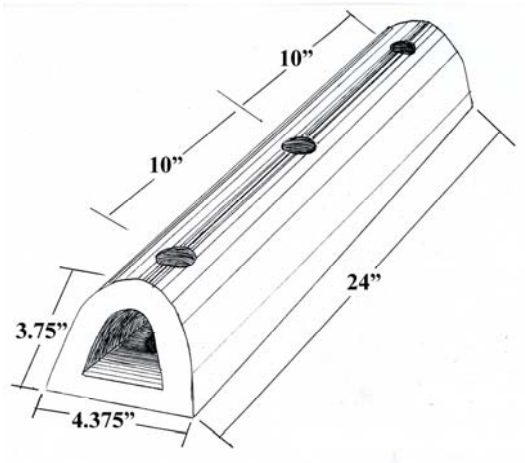

Hollow Dock Bumper

3 Holes on 10" Centers

Weight 6.75 lbs

Supreme OEM # 255109

Fiberglass Cap #139064-Supreme
White Standard

96” Wide Body

Fiberglass Cap #139064P– Supreme
Penske Yellow

96” Wide Body

Fiberglass Cap #139115– Supreme 79” Wide Body
Ryder/Budget Silver 139115W White

10’ Long X 79” Wide Body

Fiberglass Cap #139307- Supreme White Reefer Dormer

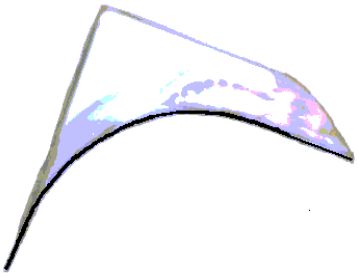

For 96” or 102” Wide Body

Fiberglass Cap #139830– Supreme Ryder/Budget Silver
Used Through 1998

96” Wide Body

Fiberglass Cap #139834-Supreme Silver Ryder and Budget *from 1999*

96”Wide Body

Fiberglass Cap #139836- Supreme Ryder/Budget Silver

102” Wide Body

Fiberglass Cap #139840– Supreme 96” Wide Body Silver

New for 2002 Ryder & Budget

Supreme Signature Series Quick Reference Guide

Notes:

DISCLAIMER

USE OF OEM OR MANUFACTURERS' NAME AND/OR PART NUMBERS IS FOR IDENTIFICATION PURPOSES AND SIMPLIFICATION ONLY AND IN NO WAY IS MEANT TO IMPLY THAT FLEET PARTS' ITEMS ARE AUTHORIZED OR IN ANY WAY AFFILIATED WITH THOSE MANUFACTURERS.

Notes:

SUPREME SIGNATURE SERIES MODEL NUMBER EXPLANATION CHART

SVF_1 24_2 096_3 102_4

1 — BODY TYPE
2 — BODY LENGTH in feet
3 — BODY HEIGHT in inches
4 — BODY WIDTH in inches

BODY TYPE

SVF- FRP OR DURAPLATE (VAN BODY) DRY FREIGHT
SVA- ALUMINUM OR DURAPLATE (VAN BODY) DRY FREIGHT
SIF- FRP OR DURAPLATE (INTER-CITY) DRY FREIGHT
IA- ALUMINUM OR DURAPLATE (INTER-CITY) DRY FREIGHT

NOTE: Production began in 2008. Signature Series body uses a new two (2) piece front inner & outer plastic cap and the rear corner cap was changed from aluminum to plastic.

DISCLAIMER

USE OF OEM OR MANUFACTURERS' NAME AND/OR PART NUMBERS IS FOR IDENTIFICATION PURPOSES AND SIMPLIFICATION ONLY AND IN NO WAY IS MEANT TO IMPLY THAT FLEET PARTS' ITEMS ARE AUTHORIZED OR IN ANY WAY AFFILIATED WITH THOSE MANUFACTURERS.

Part 232-2D (96”), 2E (108”), & 232-NH (108”) *No Holes for FRP Body*- AC Steel Z Post

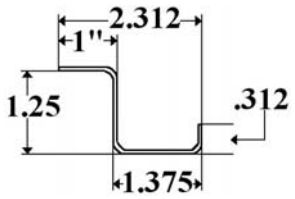

Punched on 3” Centers

Part 2010E Supreme Signature Series Front Corner Post

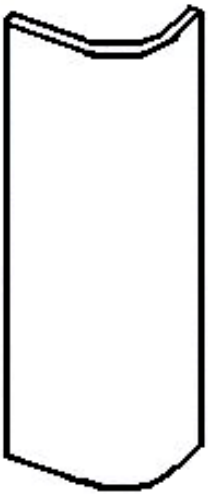

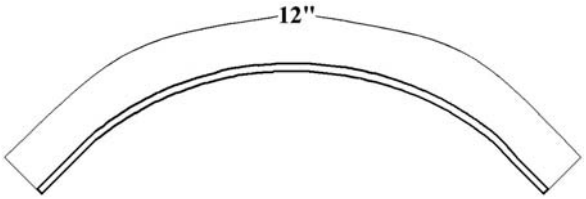

Part 02029/96 & 02029/102 — Supreme Signature Series (Duraplate Body) Horizontal Connector

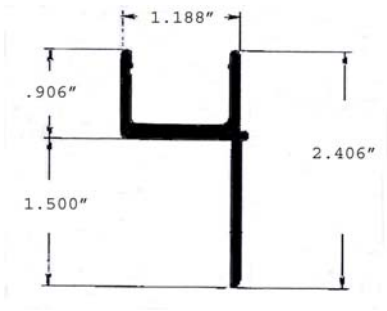

02029/96 OEM# 002011173003
02029/102 OEM# 002011173007

Part 521-1D (91”) & 521-1E (97”)-
Roof Bow Supreme New Style

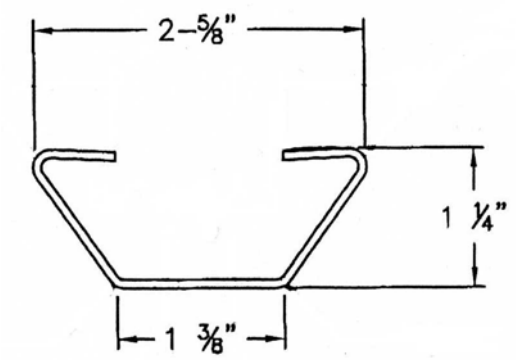

White

Part 2009F- Supreme Top Rail
VF or IF

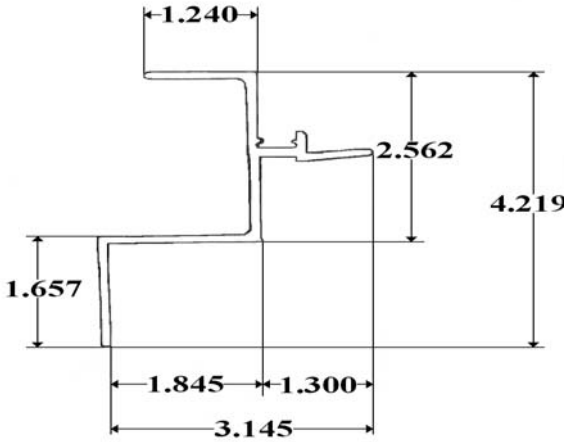

Part AB- Wooden Apitong Base

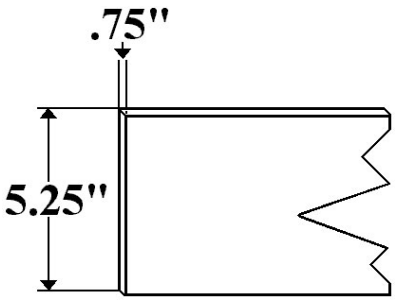

Part AS- Wooden Apitong Slat

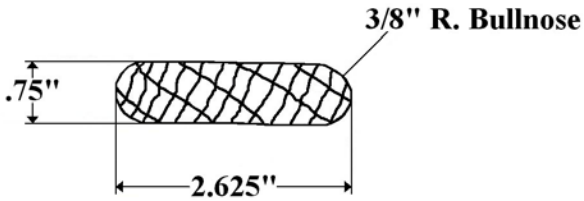

Part RR1000- RUB Rail Supreme Signature Series

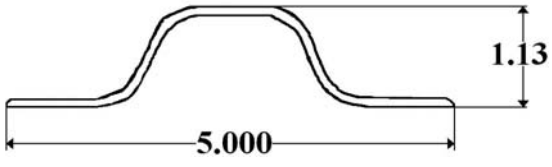

Use with 6971 End Cap

Part 6971- Supreme Signature Series End Cap

For RR1000 Extrusion

TEK SCREW SELF TAPPING
#TEK10X1-1/4”

U.S. Truck Body Parts Quick Reference Guide

Notes:

ALUMINUM BODY- USES TWO-PIECE TOP RAIL 422-2 & 366-2

FRP BODY- USES ONE-PIECE TOP RAIL 422-2

DISCLAIMER

USE OF OEM OR MANUFACTURERS' NAME AND/OR PART NUMBERS IS FOR IDENTIFICATION PURPOSES AND SIMPLIFICATION ONLY AND IN NO WAY IS MEANT TO IMPLY THAT FLEET PARTS' ITEMS ARE AUTHORIZED OR IN ANY WAY AFFILIATED WITH THOSE MANUFACTURERS.

Part 00078- U.S. Truck Roof Radius

M-Mill **W-White**

00078M	24”	X	96”
00078W	24”	X	96”

Use with Corner Cap 1211 & 1212

Part 103-1- U.S. Truck Cross-Member

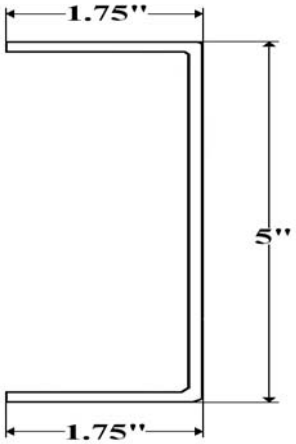

Part 104-1 (108”)- U.S. Truck 3-1/2” Z Mounting Section

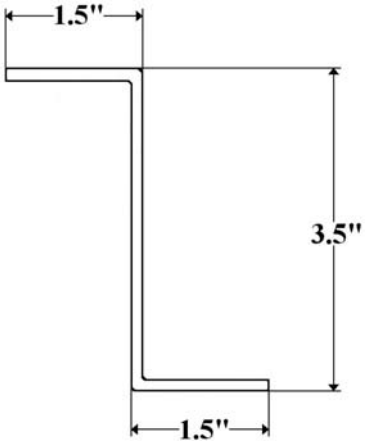

Part 107-1 (108”)- U.S. Truck 5-1/2” Z Mounting Section

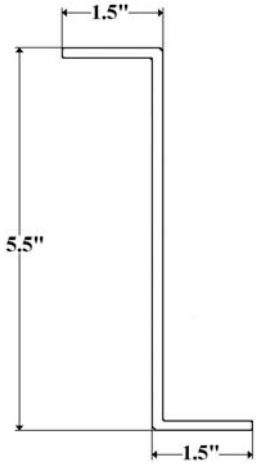

Part 203-1 (96”)- U.S. Truck Rear Header

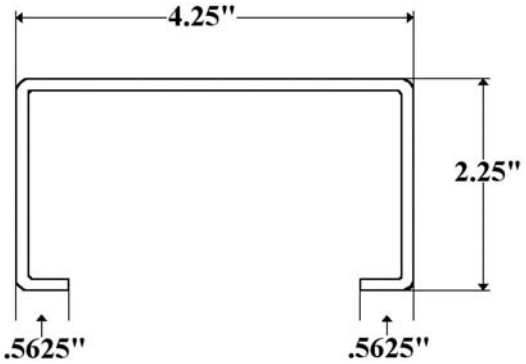

Part 208-1- U.S. Truck Rear Corner Post Swing Door

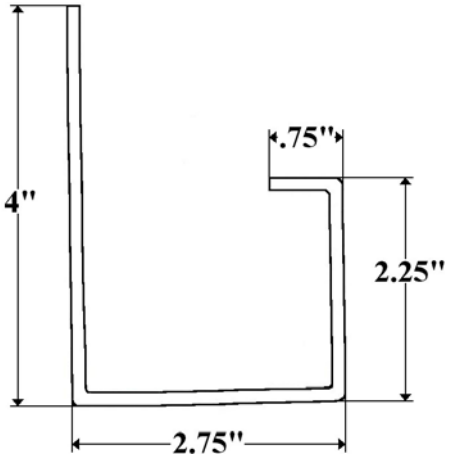

Part 225-2- U.S. Truck Hat Post

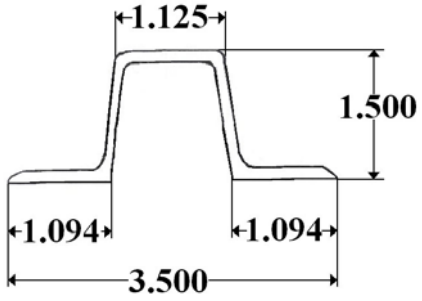

Part 280-1- U.S. Truck Rear Corner Post- Roll-Up Door

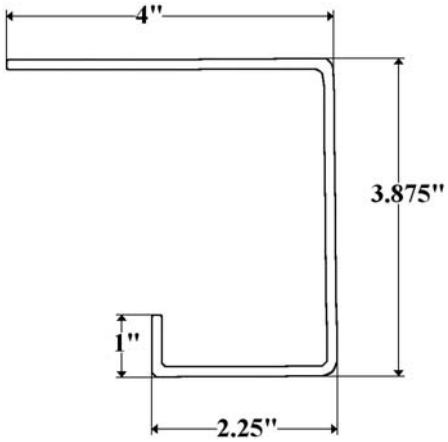

Part 305- U.S. Truck Rub Rail

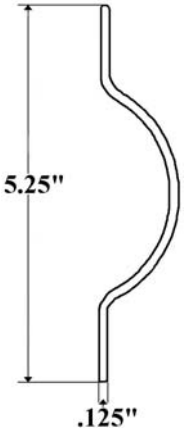

See Casting #322-5

Part 305-2- Bottom Rail U.S. Truck

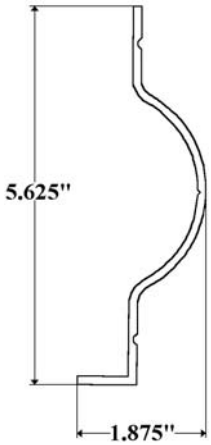

See Casting #322-5

Part 307-2- U.S. Truck Bottom Rail

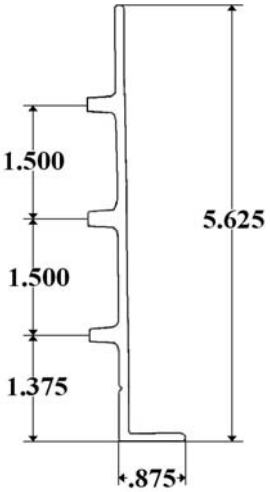

Part 316-2- U.S. Truck Front Corner Post Aluminum Body

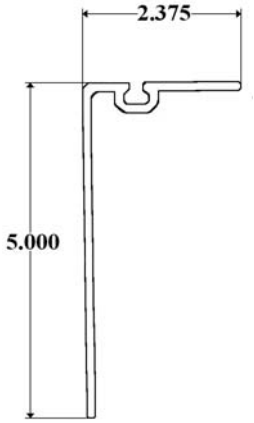

Uses 407-5 Corner Cap

Part 322-5- End Cap

Used with 305 and 305-2 Extrusions

Part 332-2D (97”), 2E (108”) & 2F (112”)- U.S. Truck Aluminum Z-Post

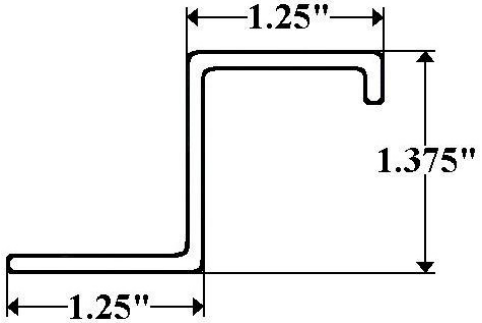

Part 333-2- U.S. Truck Vertical Connector 108”

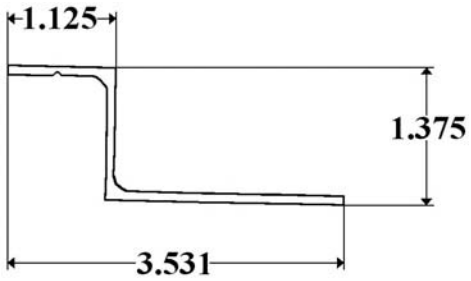

Part 334-2- U.S. Truck Front Corner Post

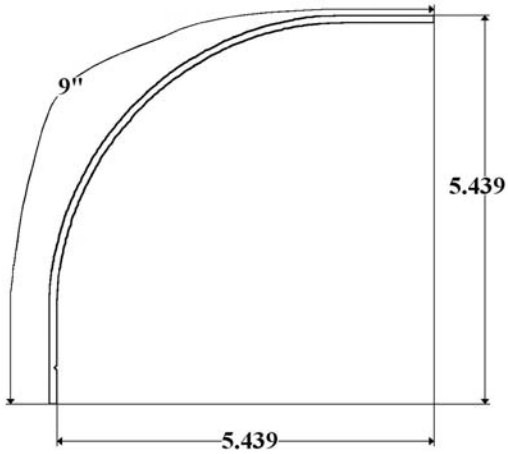

Part 339-2- U.S. Truck Hat Post

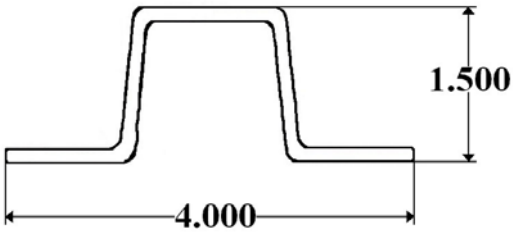

Part 366-2- U.S. Truck Top Rail Lower Aluminum Body

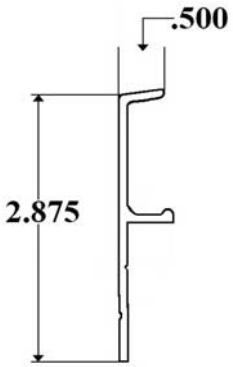

Upper 422-2

Part 367-2—U.S. Truck Body New Style Top Rail (Lower Piece on Aluminum Body)

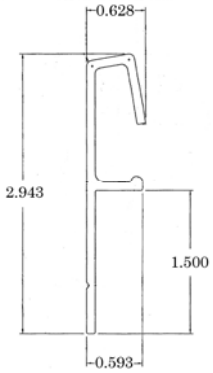

Part 388-17- U.S. Truck Body Stainless Steel Corner Radius Punched 5” Centers

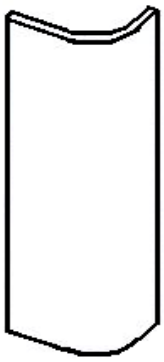

Part 403-2AG- U.S. Truck Top Rail Rear

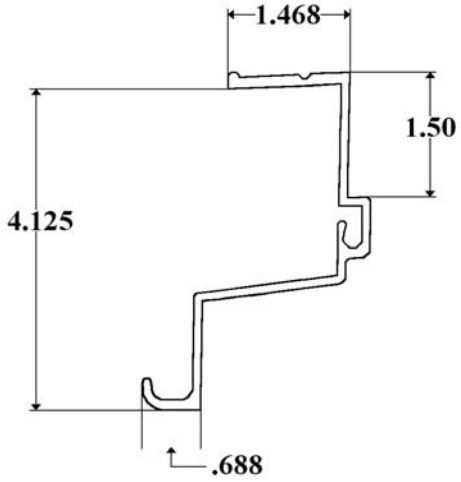

Part 418-5- U.S. Truck Left/Front Cap

Obsolete Use FP438-5

Part 419-5- U.S. Truck Right/Front Cap

Obsolete Use FP439-5

Part 421-1D &1E– U.S. Truck Roof Bow

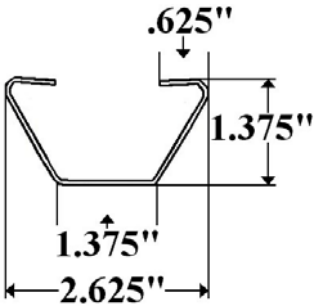

Part 422-2- U.S. Truck Roof Cove

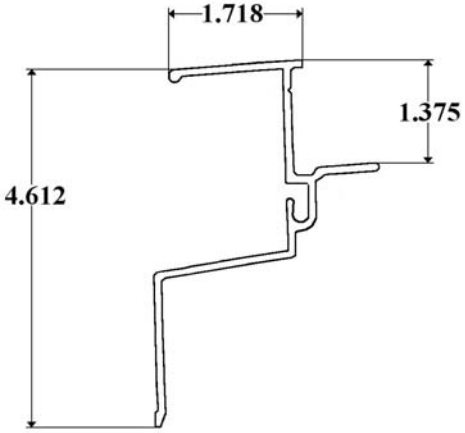

Used with 366-2 Aluminum Body Only

Part 423-2 - U.S. Truck Body New Style Roof Cove (Upper Piece on Aluminum & FRP Body

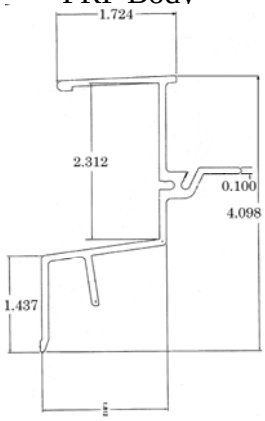

Part 427-1 (98")- U.S. Truck Starter Bow

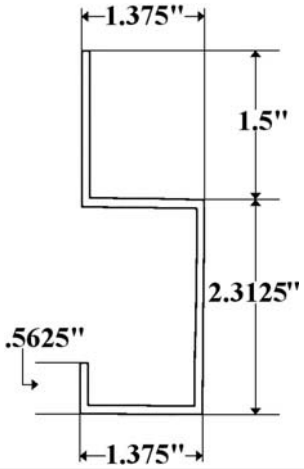

Part 429-5- U.S. Truck Front Cap For Straight Roof

Right or Left

Part 441-11A- U.S. Truck 94" Wide Body Ryder Yellow Fiberglass Nose Cap

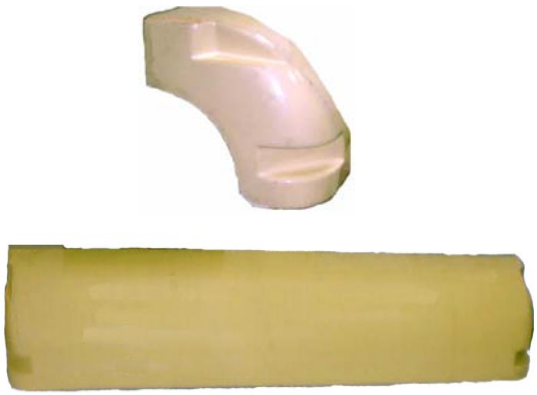

Part FP407-5– U.S. Truck Rear Cap

Used on Front with Square Front Corner Post (316-2 & 317-2)

Part FP438-5- U.S. Truck
Left/Front Cap

Part FP439-5- U.S. Truck
Right/Front Cap

Part 450L -- U.S. Truck
Left/Front Cap New Style

Part 451R- U.S. Truck
Right/Front Cap New Style

Part 531- End Cap

For RR531 Extrusion

DLP108A (A Slot) & DLP108E (E Slot)
108" Double Logistic Wall Post

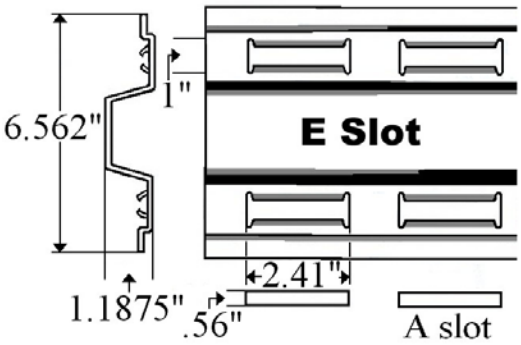

Part RR531- U.S. Truck RUB Rail

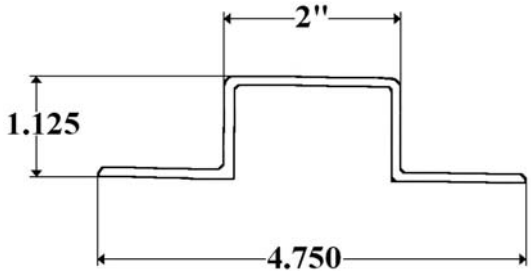

Uses Casting #531

Part S332-2- U.S. Truck Steel Z-Post

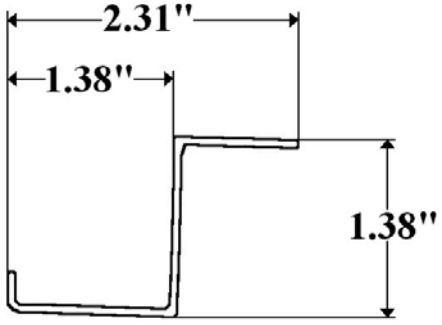

Punched 2" Centers

Utilimaster Body Parts Quick Reference Guide

Notes:

DISCLAIMER

USE OF OEM OR MANUFACTURERS' NAME AND/OR PART NUMBERS IS FOR IDENTIFICATION PURPOSES AND SIMPLIFICATION ONLY AND IN NO WAY IS MEANT TO IMPLY THAT FLEET PARTS' ITEMS ARE AUTHORIZED OR IN ANY WAY AFFILIATED WITH THOSE MANUFACTURERS.

Part 00010 (97”) & 00010/108 (108”)– Steel Slat Spacer FRP Body

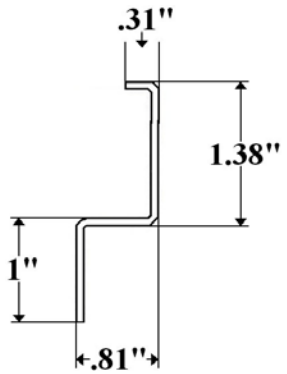

Part 03020R&L-Utilimaster Vertical Connector Aluminum Body 108”

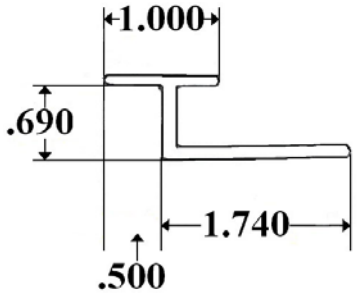

Please Specify Right or Left
03020L OEM # 06918985
03020R OEM # 06918987

Part 3002- Utilimaster Top Rail

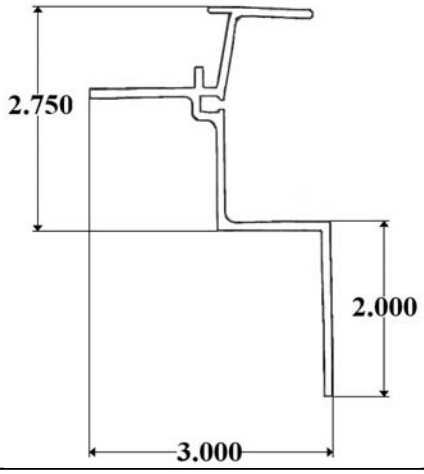

Part 3003- Utilimaster Bottom Rail
Thru 1/98

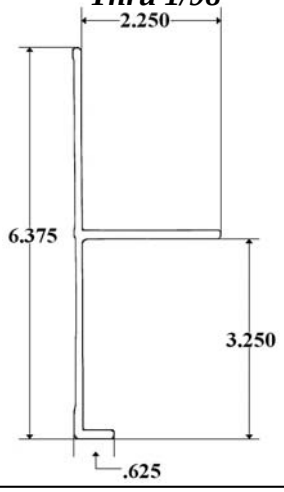

Part 3004- Utilimaster Bottom Rail
From 2/98

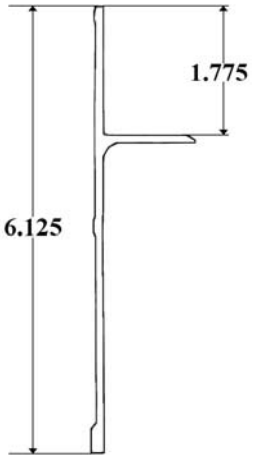

Part 3005- Utilimaster Bottom Rail
New Style

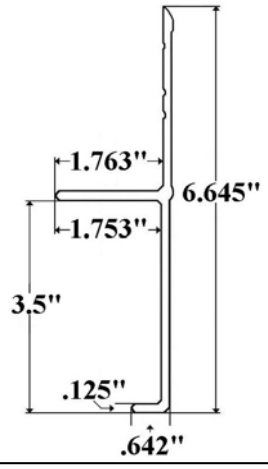

Part 3007– Utilimaster Top Rail New

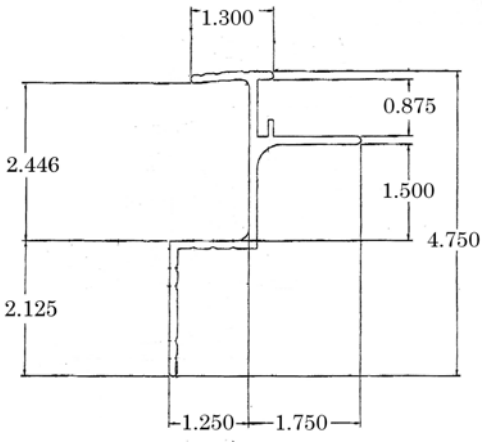

Part 3009- Utilimaster Rear Top Rail

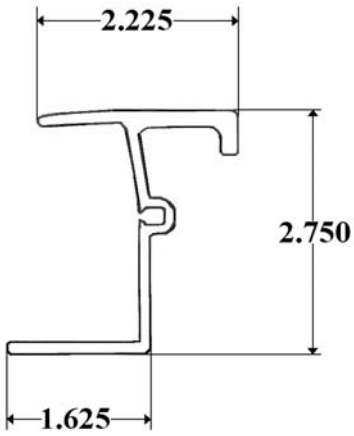

Utilimaster Roof Radius *Mitred*

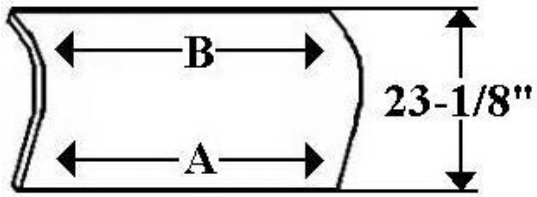

	A		B	
3012RY	**80”**	**X**	**88-1/2**	**Ryder Yellow**
3012M	**84”**	**X**	**92-1/2**	**Mill**
3012M2	**90”**	**X**	**98-1/2**	**Mill**

Part 3050/92.5 (92.5”) & 98.5 (98.5”)- Starter Bow Utilimaster

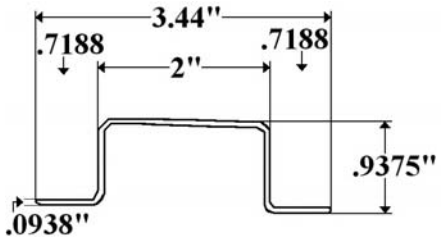

Part 321-1C (88.5”), 1D (92.5”) & 321-1E (98.5”)– Roof Bow Utilimaster

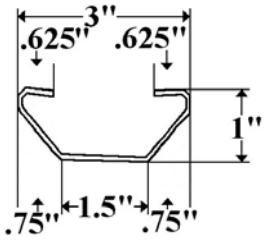

Part 330-2D (96”)- Utilimaster Steel Z-Post Aluminum Body *1998*

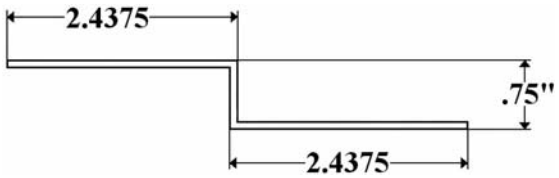

Utilimaster Corner Radius

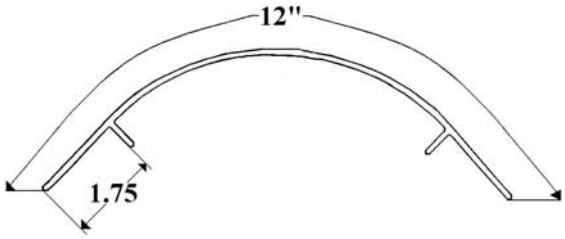

4030/103	**12”**	**X**	**103.5”**	**Extruded**
4030/112	**12”**	**X**	**112”**	**Extruded**

SQUARE CORNER HINGE

No. 4040

Square corner rear door hinge. All steel, this hinge allows door to swing 270° for full opening. Supplied with non-removable pin. (Removable pin also available). Universal for right or left hand doors. Available Flush to 1/2" Offset.

Specifications:

Bracket:	**8 ga x 5" x 4-1/2" Wide**
Strap:	**8 ga x 1-3/4" x 12-1/8" Long**
Pin:	**1/2" Dia.**
Finish:	**Zinc plated**
Weight:	**3-3/4 lbs.**

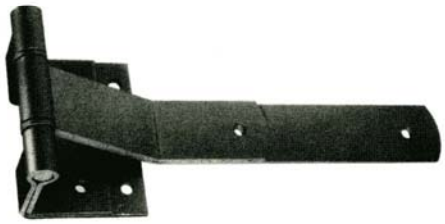

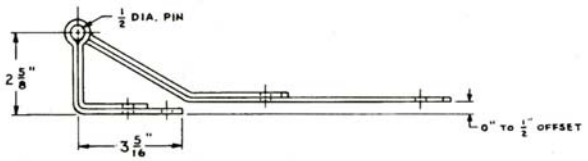

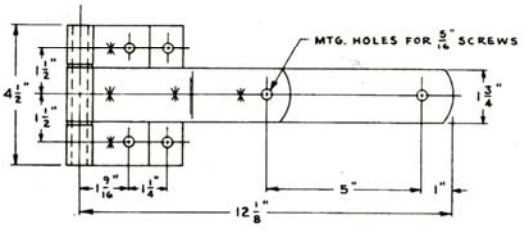

Part 732-2D (96") & 2E (108")- Utilimaster Steel Z-Post Aluminum Body

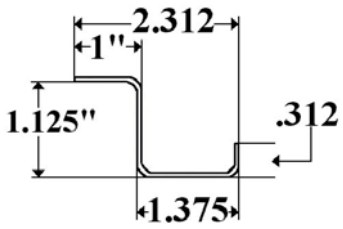

Punched 3" Centers

Part CGS- Utilimaster 1/4 H.D. Steel Corner Gusset

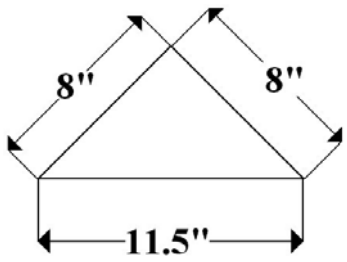

Part FP3000AF– Utilimaster Rear Cap

Part FP3000L– Utilimaster Left/Front Cap

Part FP3000R– Utilimaster Right/Front Cap

Part FP3100L– Utilimaster Left/Front Corner Cap *New Style*

Part FP3100R– Utilimaster Right/Front Corner Cap *New Style*

Part FP3107L– Utilimaster Left Rear Corner Cap, New Style

Used with 3007 Top Rail

Part FP3107R– Utilimaster Right Rear Corner Cap, New Style

Used with 3007 Top Rail

Part GR2- New Utilimaster Rear Header

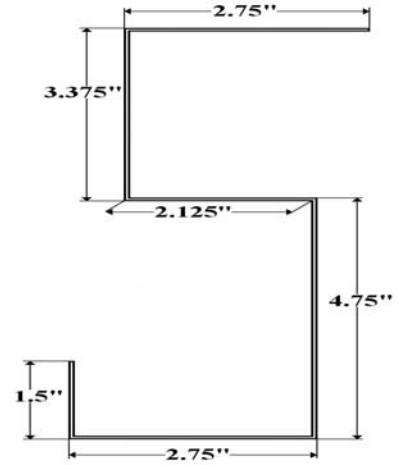

Part UT1- Utilimaster Rear Header

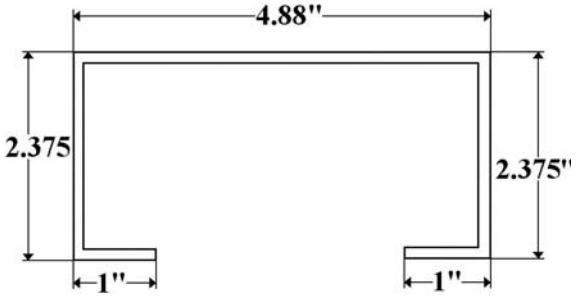

Part UT3 (108")- Utilimaster Rear Corner Post

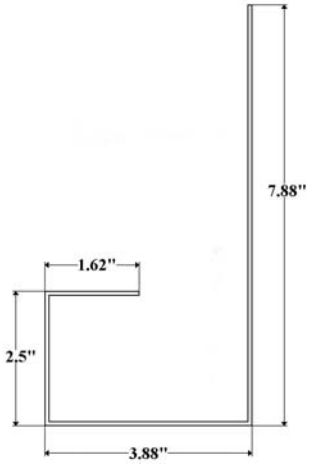

<u>FULL LINE OF</u>:

- **FASTENERS**
- **HARDWARE**
- **SEALANTS**
- **FRP**
- **ROOFING**
- **PANELS**
- **TOOLS**
- **DOORS & PARTS**

Fiberglass Cap #1900937- Utilimaster 96” Wide Body
Penske Yellow

Fiberglass Cap #20510266- Utilimaster 96” Wide Body
Silver Ryder and Budget

Fiberglass Cap #20510912- Utilimaster 102” Wide Body
Silver Ryder and Budget *2004*

Top Rails

Part 00117- Duralite Top Rail

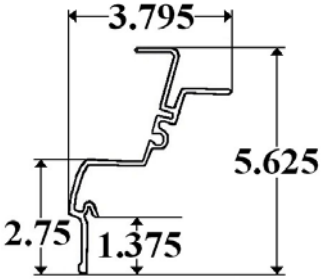

Part 08020 - American Commercial (America's Body Co.) Connector and Universal Rail

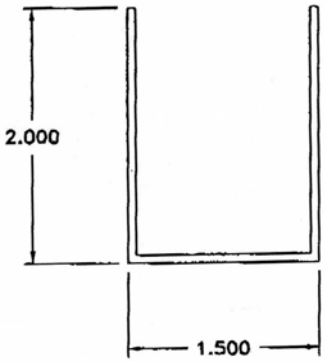

Part 1001- Morgan Top Rail GVSD Aluminum Body*As of 10/2008*

OEM # 00015904

Part 1001F- Morgan Top Rail GVFD FRP Body*As of 10/2008*

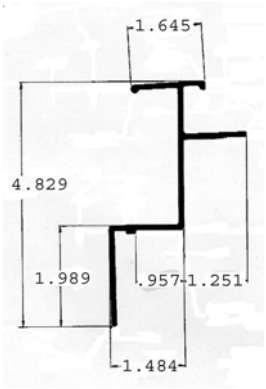

OEM # 00033901

Part 1002- Morgan Top Rail 1-3/8" Roof Bow GVSD *Thru 3/97*

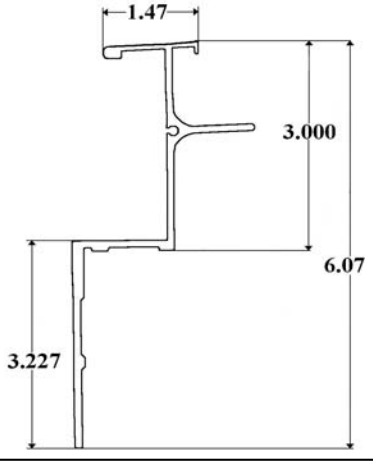

Part 1002F- Morgan Top Rail 1-3/8" Roof Bow GVFD *Thru 3/97*

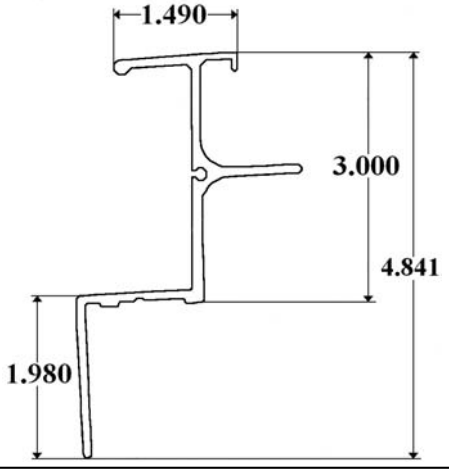

Part 1006- Morgan Top Rail GVSD
***New Style* 1" Roof Bow**

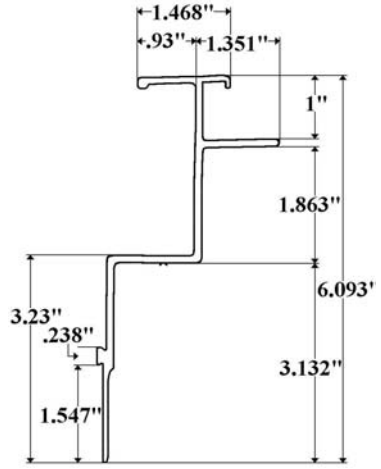

Part 1006F- Morgan Top Rail GVFD
***New Style* 1" Roof Bow**

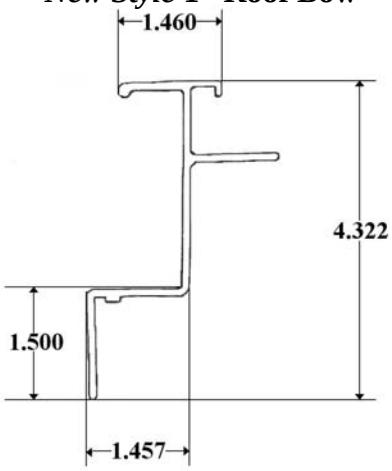

Part 1007F- Morgan Top Rail GVFD
1" Roof Bow *New for 2003*

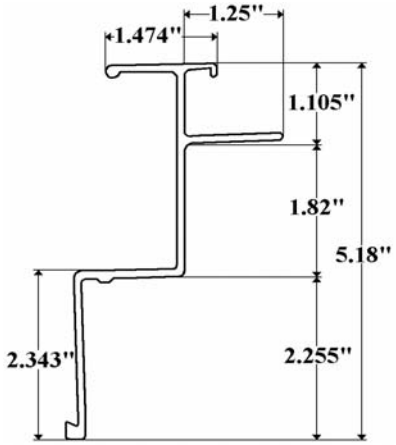

Part 1009- Morgan Top Rail GVSD
1" Roof Bow *From 4/97*

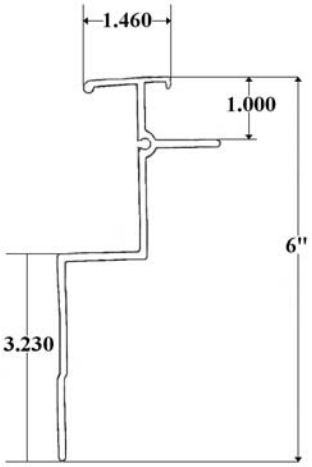

Part 1009F- Morgan Top Rail GVFD
1" Roof Bow *From 4/97*

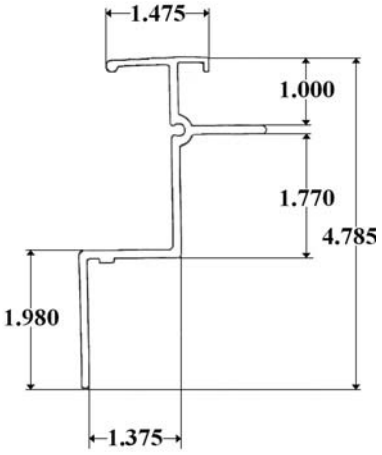

Part 2002- Supreme Upper Top Rail
VA or IA

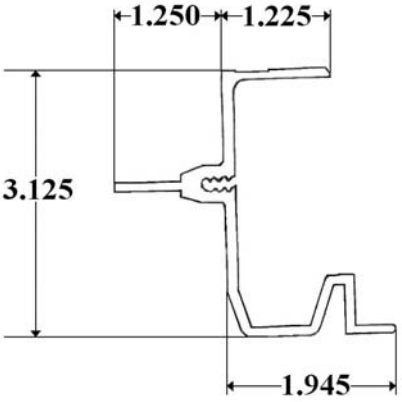

Lower Use Universal Rail (UR)

Part UR- Universal Rail Supreme-
Lower of 2 PC Top Rail
for Aluminum Body

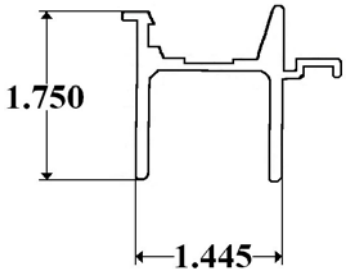

Rear Connector Aluminum Body,
Side Door Frame Aluminum Body

Part 2002F- Supreme Top Rail
VF or IF

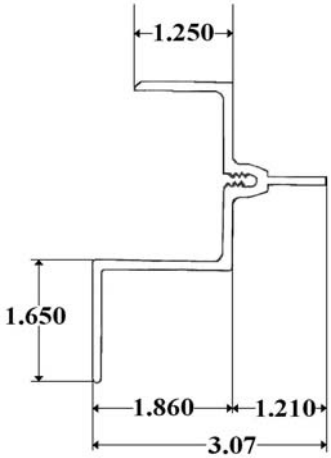

Part 2009- Supreme Upper Top Rail
Aluminum Body New Style

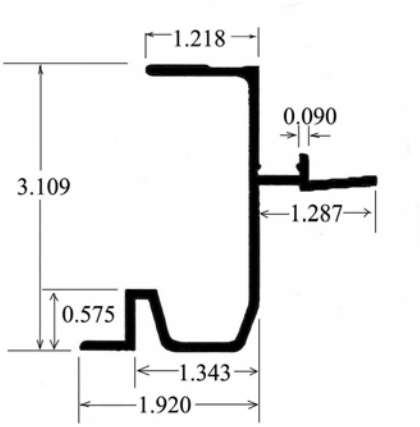

Part 2009F- Supreme Top Rail
VF or IF

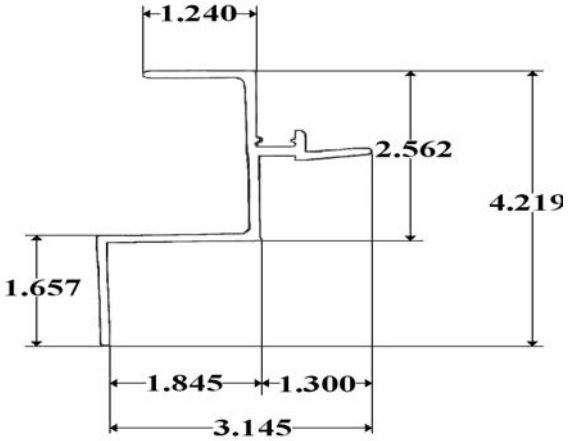

Part 2121-Top Rail

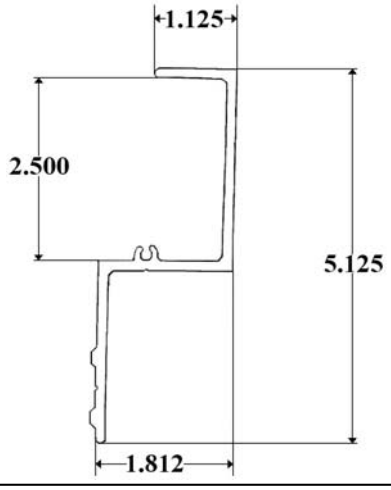

Part 3002- Utilimaster Top Rail

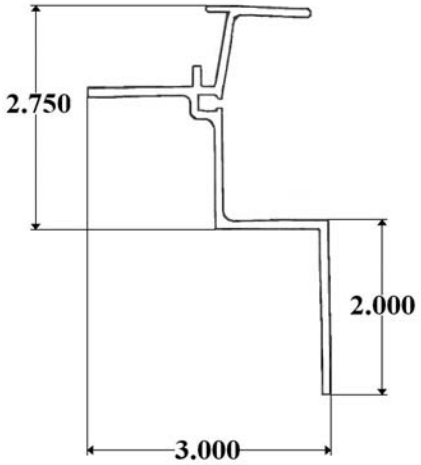

Part 3007– Utilimaster Top Rail New

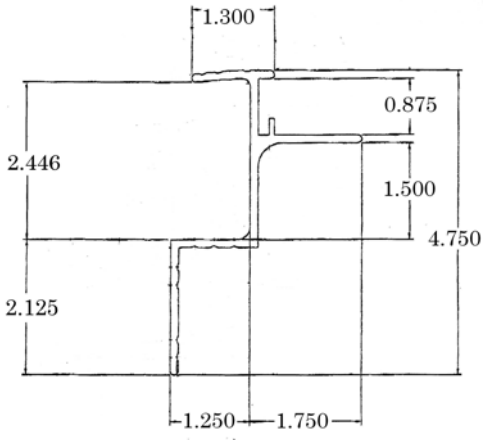

Part 3009- Utilimaster Rear Top Rail

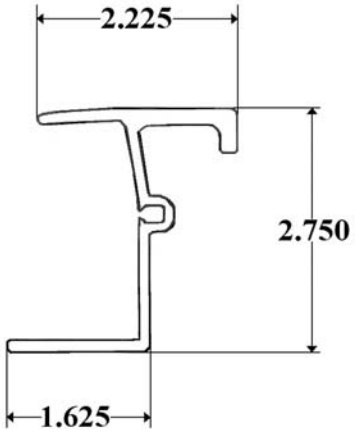

Part 366-2- Top Rail Lower U.S. Truck Aluminum Body

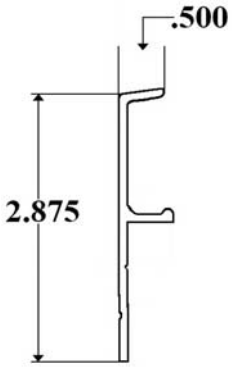

Upper 422-2

Part 367-2 - U.S. Truck Body New Style Top Rail (Lower Piece on Alum. Body)

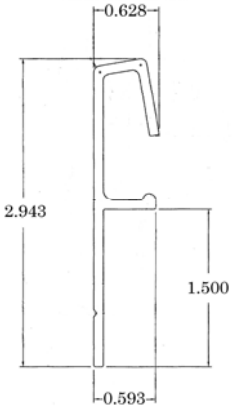

Part 3902- Modern Wagon Top Rail

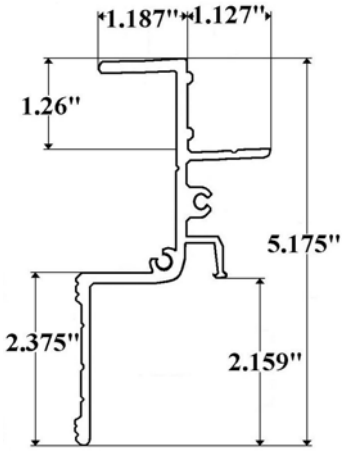

Part 403-2AG- U.S. Truck Top Rail Rear

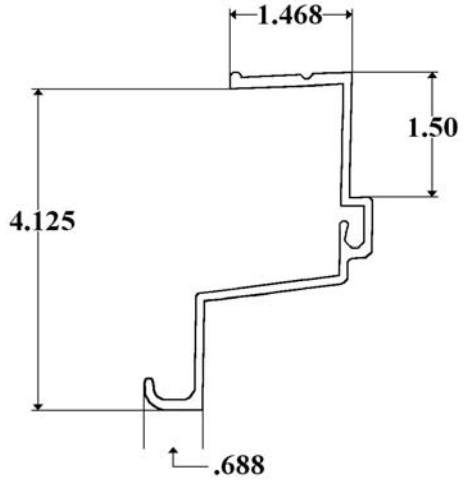

Part 422-2- Roof Cove U.S. Truck

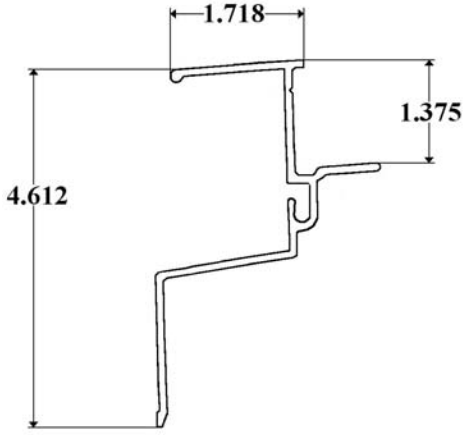

Used with 366-2 Aluminum Body Only

Part 423-2 - U.S. Truck Body New Style Roof Cove (Upper Piece on Aluminum & FRP Body)

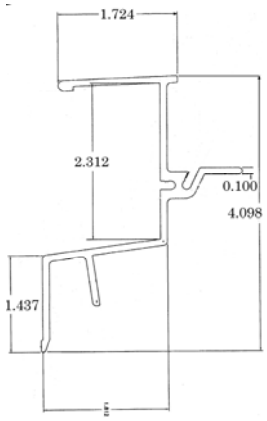

Part 4002- Top Rail Grumman

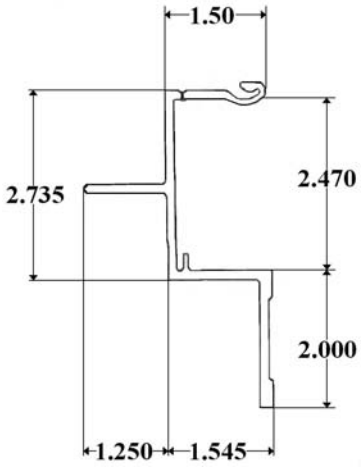

Interlock for Grumman Top Rail

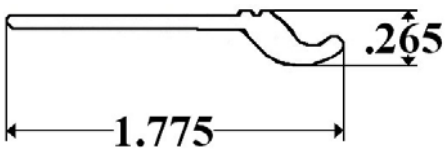

Use with 4002 Top Rail

Part 5002- Top Rail Kidron

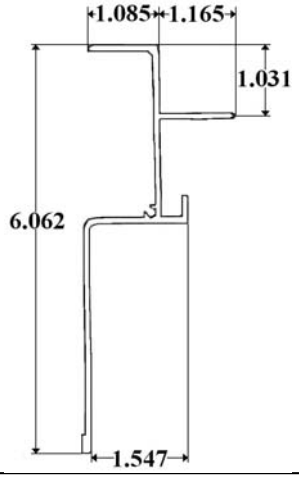

Part 5004- Kidron New Dry Freight Top Rail

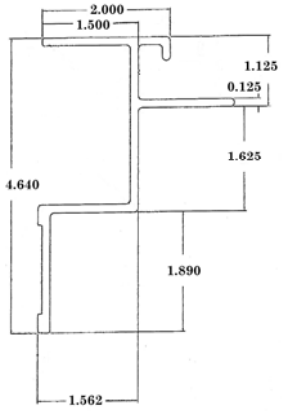

Part 6002- Top Rail Mickey

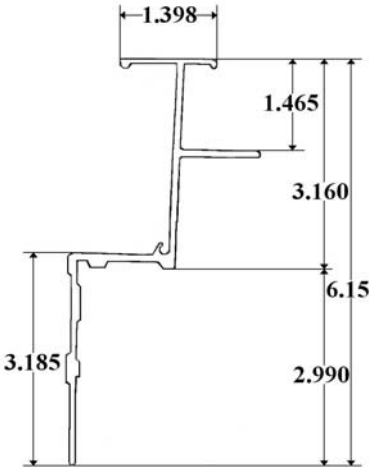

Part 7002- Top Rail A.M. Haire

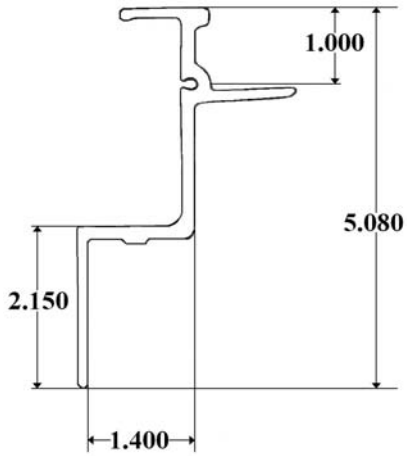

Part 7701- ABC Body Upper Top Rail

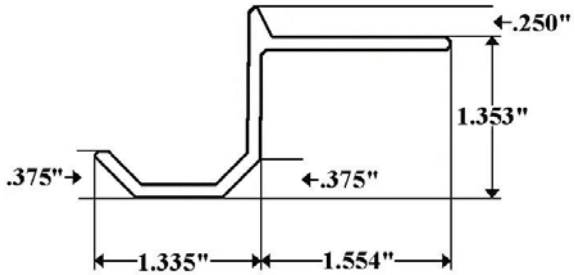

Use #7702 for Lower Top Rail

Part 7702- ABC Body Lower Top Rail

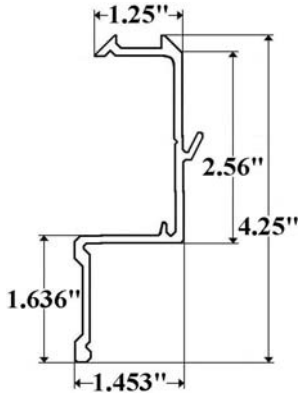

Use #7701 for Upper Top Rail

Part 8002- Top Rail A/C

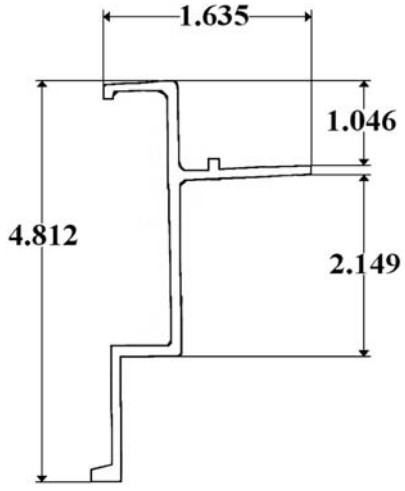

Part 9001- Top Rail Babb *Old Style*

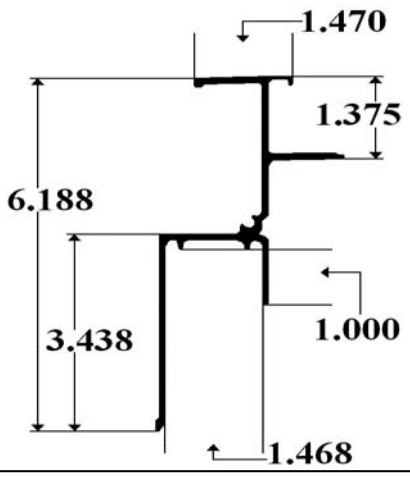

Part 9002- Top Rail Babb *New Style*

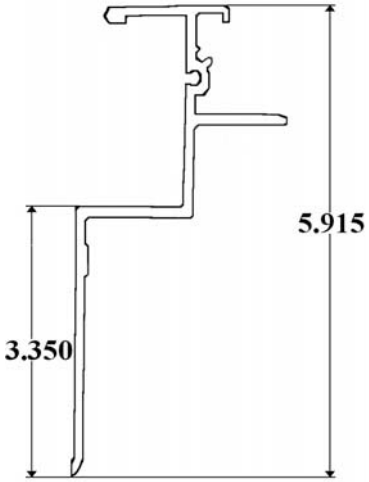

Part 9902- Marathon/Satellite/Metro Top Rail

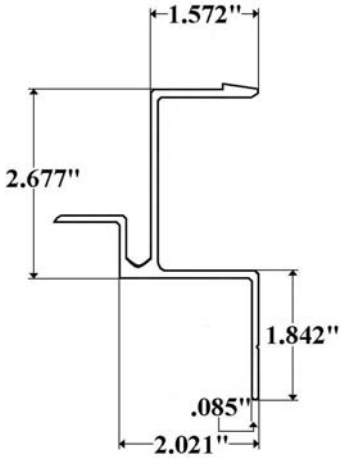

Part C-531 - Continental Truck Body Top Rail

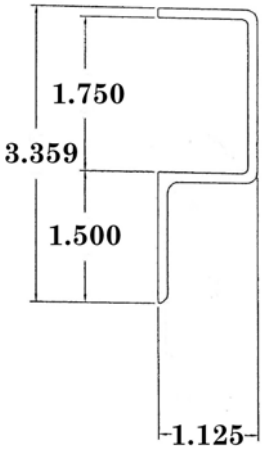

Part VB804/16 (16')- Replacement Top Rail for Grumman V-Body

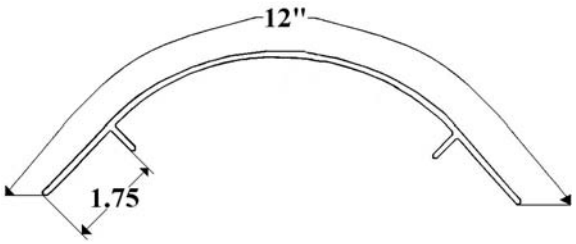

Must Replace Complete

Bottom Rails

Part 1003- Morgan Bottom Rail GVFD & GVSD

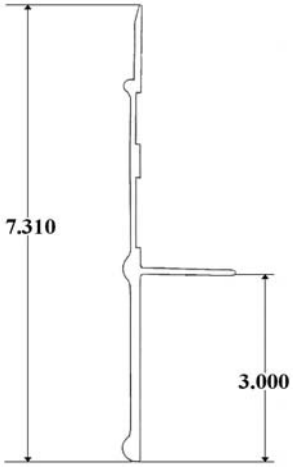

Part 1005- Morgan Bottom Rail GVFD
New Style

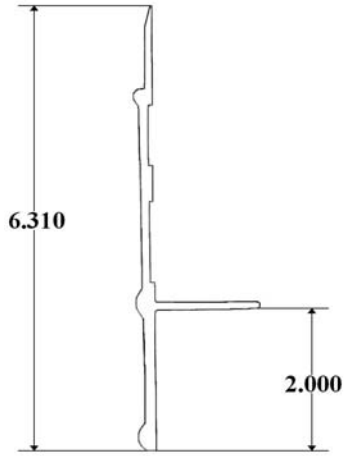

Part 1008F- Morgan Bottom Rail GVFD
From 97 to Present

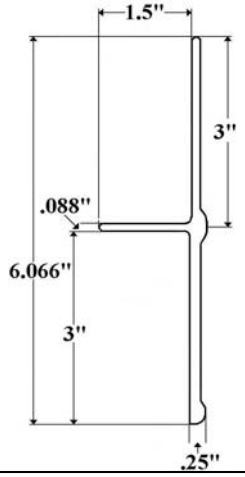

Part 2003- Supreme Bottom Rail
VA or IA

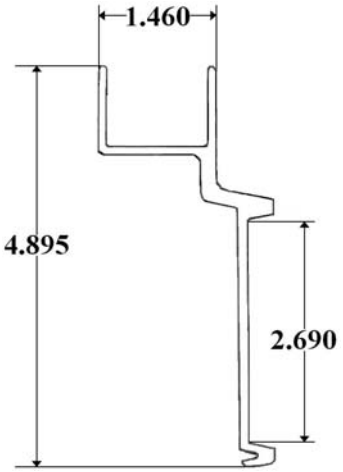

Part 2003F- Supreme Bottom Rail
VF or IF

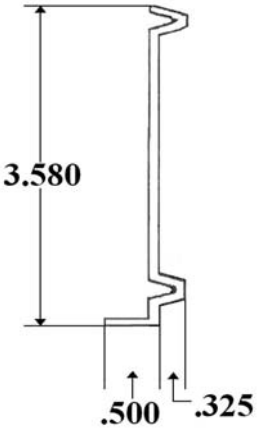

Also Replacement for Duralite

Part 2004F- Supreme Bottom Rail
VF or IF

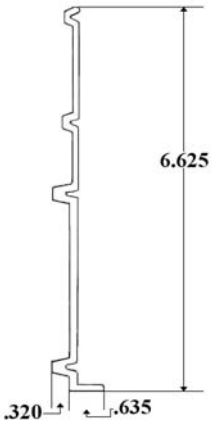

Also Replacement for Modern Wagon

Part 3003- Utilimaster Bottom Rail
Thru 1/98

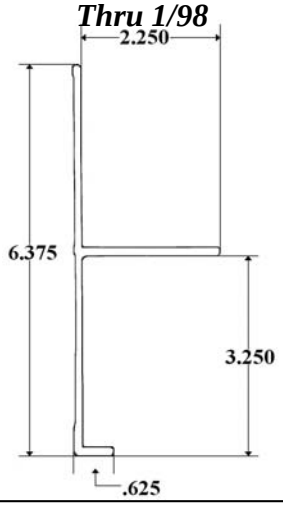

Part 3004- Utilimaster Bottom Rail
From 2/98

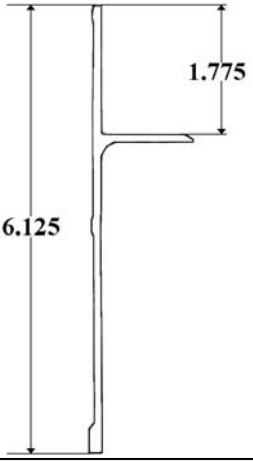

Part 3005- Utilimaster Bottom Rail
New Style

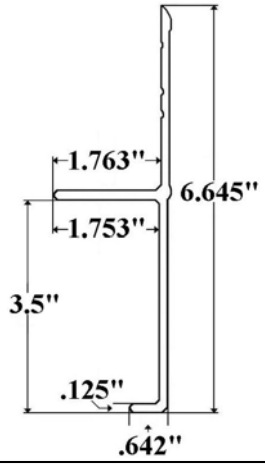

Part 305-2- Bottom Rail U.S. Truck

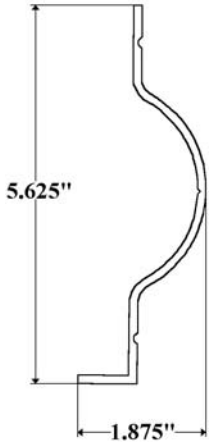

See Casting #322-5

Part 307-2- Bottom Rail U.S. Truck

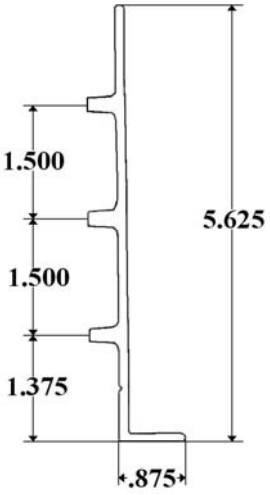

Part 4003- Bottom Rail Grumman

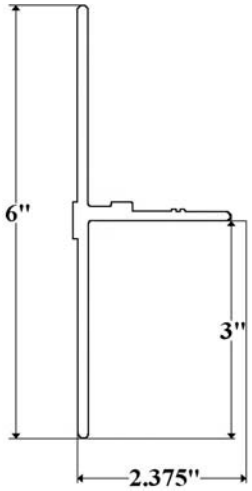

Part 5003- Bottom Rail Kidron

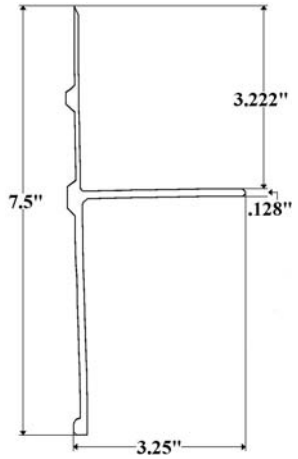

Will Replace Delta FZ, Gindy &Vanco

Part 5005 - Kidron Bottom Rail Cargo Star Dry Freight

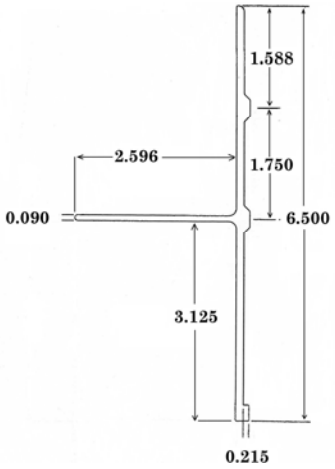

Part 6003- Bottom Rail Mickey

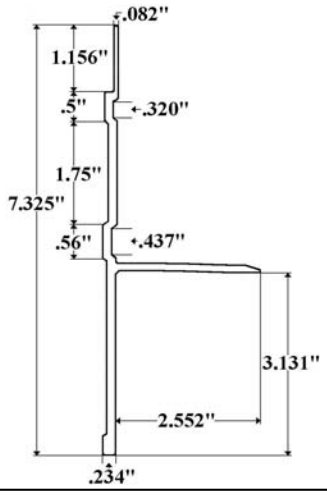

Part 7003– A. M. Haire Bottom Rail

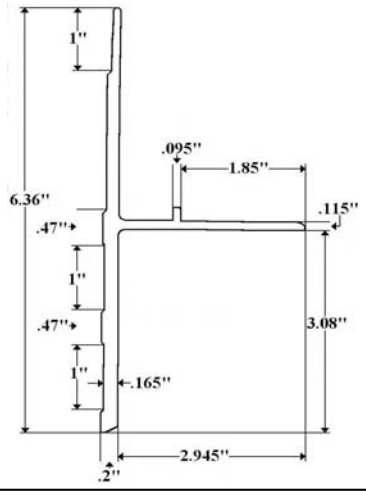

Part 7703- ABC Body Bottom Rail

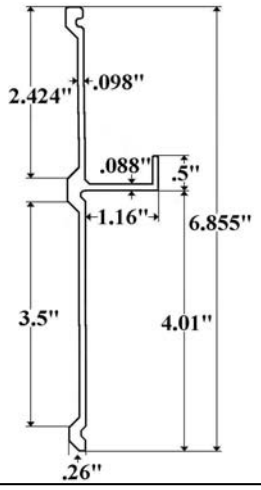

Part 8003- Bottom Rail A/C

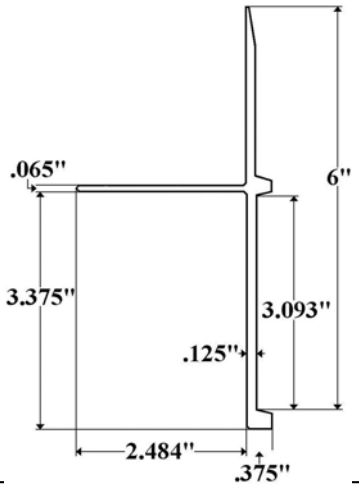

Part 9003- Babb Bottom Rail *New Style*

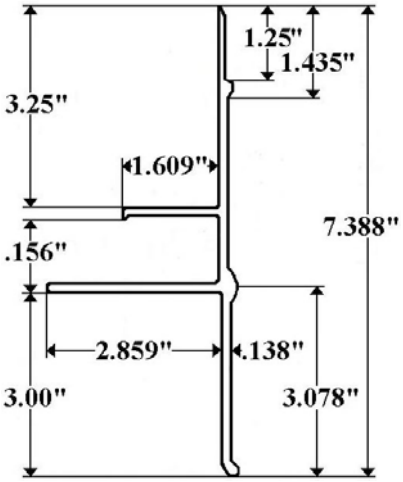

Part 9903F- Marathon/Satellite/Metro Bottom Rail—*FRP Body*

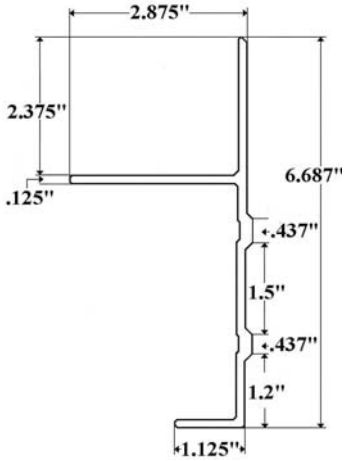

Part 9904– Marathon Bottom Rail *Aluminum Body*

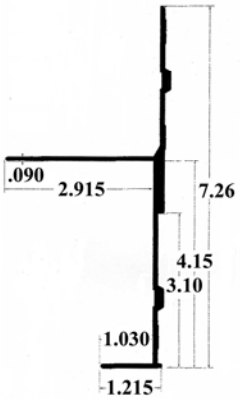

Part TRVBOT- Bottom Rail Babb, Trail-R-Van, Delta QX

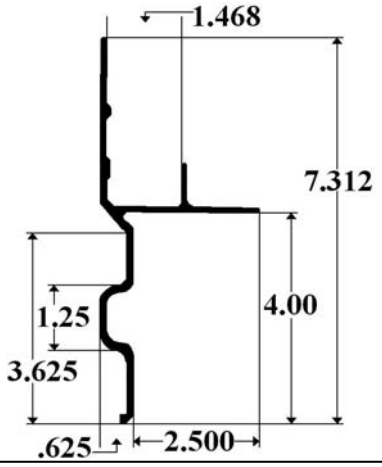

Rub Rails & End Caps

Part 305- U.S. Truck Rub Rail

Uses Casting #322-5

Part 322-5- End Cap

Used with 305 Extrusion

Part RR1000- Rub Rail Morgan
New Style

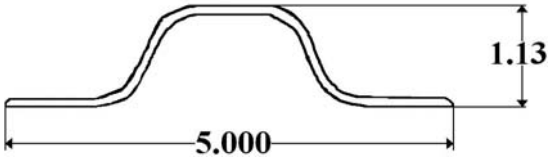

Uses Casting #6971

Part 6971- Morgan End Cap

For RR1000 Extrusion

Part RR2120- Rub Rail

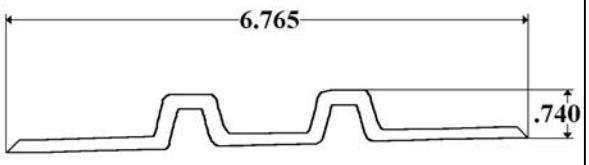

Part RR531- Rub Rail Morgan, US, UPS, Mickey, & Others

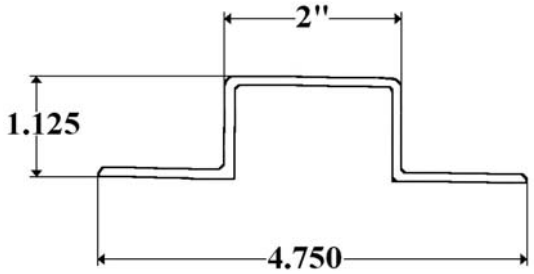

Uses Casting #531

Part 531- End Cap

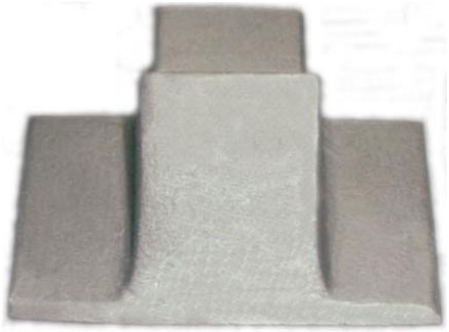

For RR531 Extrusion

Part RR619- Rub Rail UPS

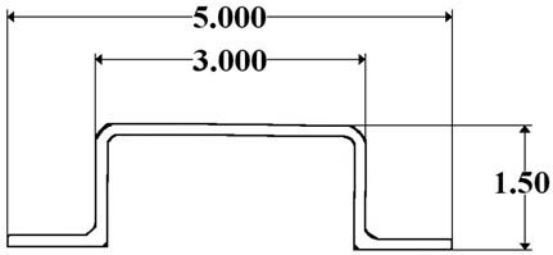

Uses Casting # 619

Part 619- End Cap UPS

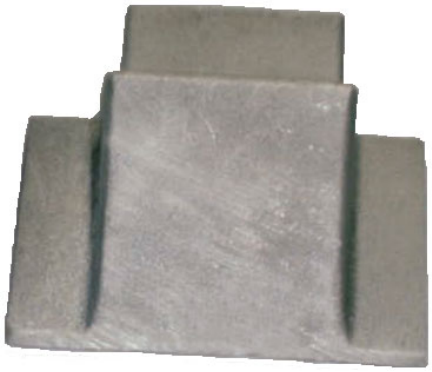

For RR619 Extrusion

Part RR9004– Rub Rail

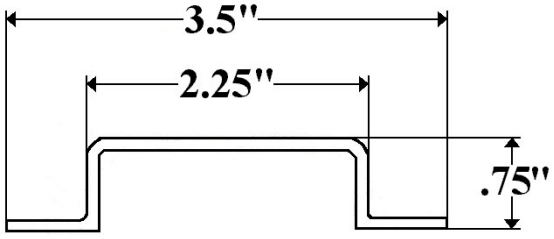

Uses Casting #9004

Part 9004- End Cap

Use With RR9004 Rub Rail

Posts

Part 00010 (97”) & 00010/108 (108”)– Steel Slat Spacer

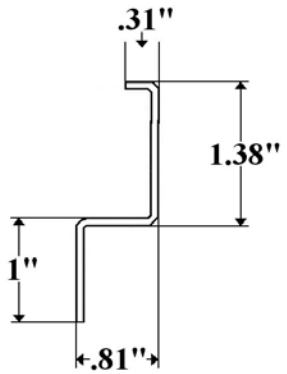

Part 00049- Duralite Steel Hat Post

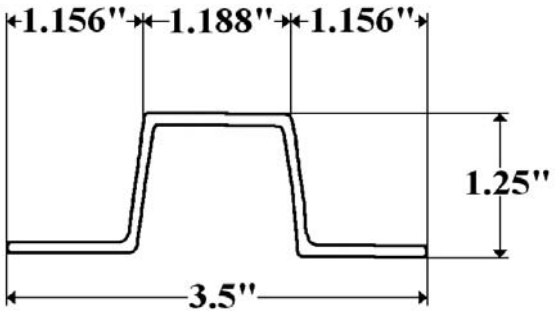

Use S2022

Part 00050 - Kidron FRP Base & Slat Spacer 105.5”

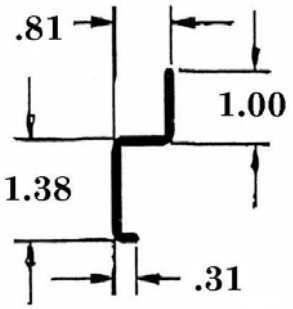

Part 1022- Morgan Aluminum Hat Post

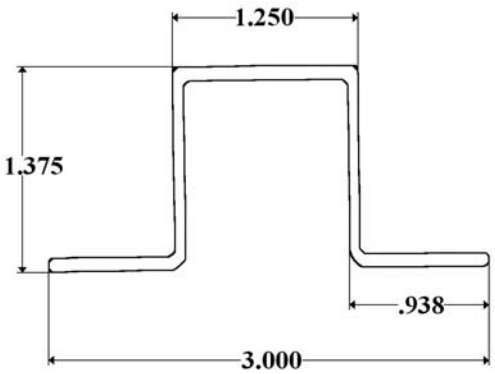

Part 2010MINI - Supreme Mini Front Corner Post Aluminum

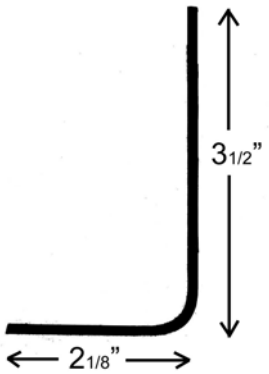

OEM # 002099700007

Part 2219- RUB Rail Can Be Used As Post

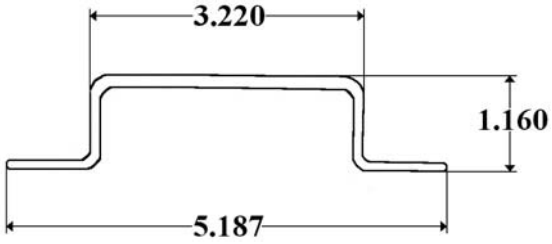

Part 225-2- Hat Post U.S. Truck

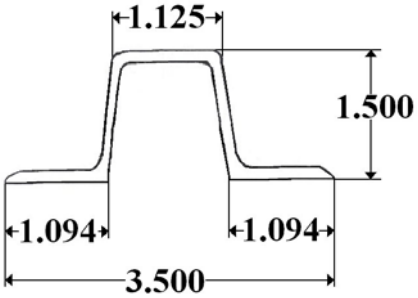

Part 232-2D (96"), 2E (108"), & 232-NH (108") *No Holes for FRP Body*
Supreme, AC, Delta, Vanco Steel Z Post

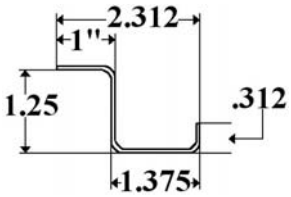

Punched on 3" Centers

Part 330-2D (96”)- Utilimaster Steel Z-Post Aluminum Body *1998*

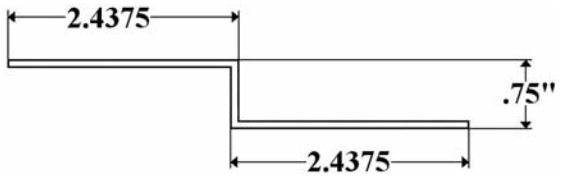

Part 332-2D (97”), 2E (108”) & 2F (112”)- Aluminum Z-Post Morgan, U.S., Jannell, Grumman, Babb, Mickey, & Others

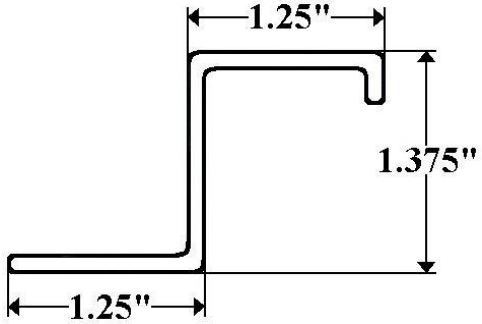

Part 339-2- Aluminum Hat Post U.S. Truck

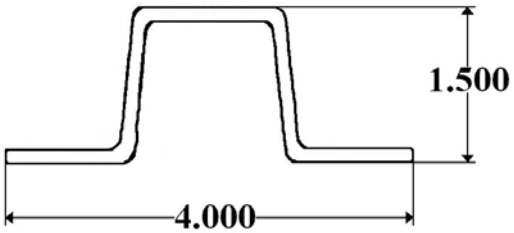

Part 432-2 (107”)- Aluminum Z Post
Kidron

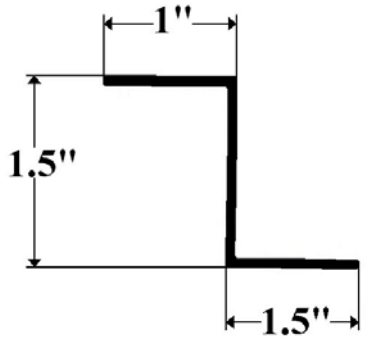

Part 732-2D (97”) & 2E (108”)-
Steel Z-Post Utilimaster, Grumman, A.M. Haire

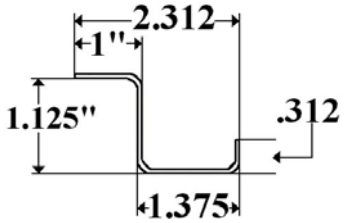

Punched 3” Centers

Part 932-2E- Marathon/Satellite/Metro
Steel Z Post
1-13/16” X 107-7/8” *Punched 3” Centers*

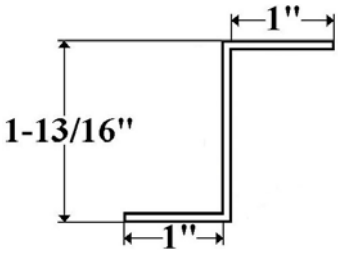

DLP108A (A Slot) & DLP108E (E Slot)
108” Double Logistic Wall Post

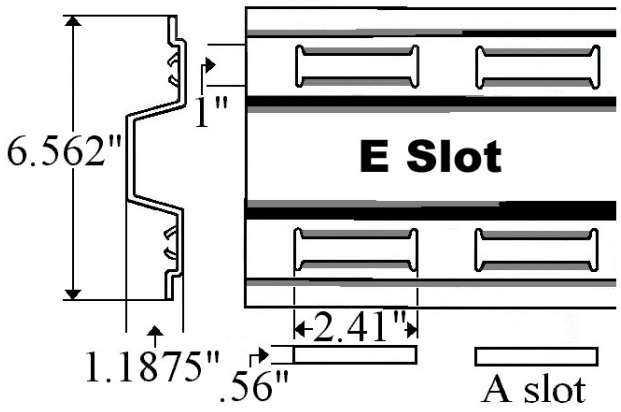

Part S1022 (107”)- Steel Hat Post
Morgan, U.S., Mickey

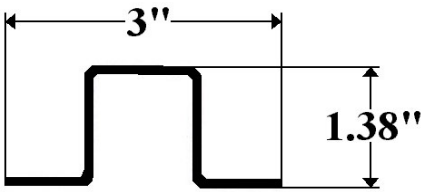

Punched 2” Centers

Part S2022- Steel Hat Post

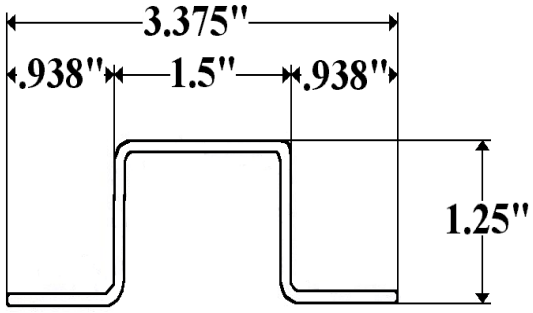

Part S3022- Steel Hat Post & Roof Bow

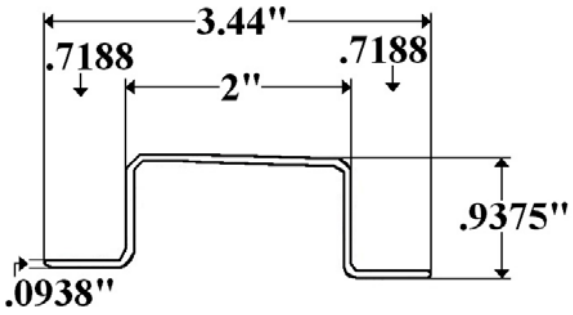

Kidron Roof Bow
ABC Roof Bow & Side Post

Part S332-2D (97”) & 2E (108”)–
Steel Z Post, Morgan, U.S. Truck,
Mickey, Babb

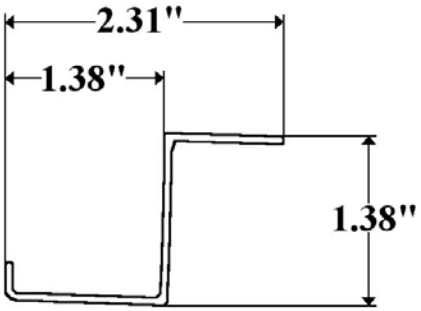

Punched 2” Centers

Part S5022- Steel Hat Post

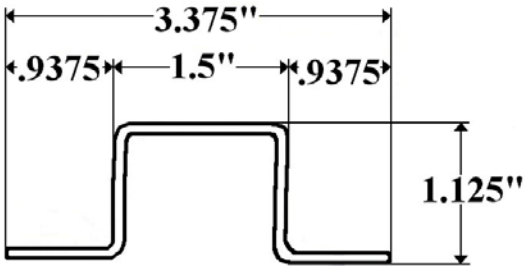

Part S9922- Steel Hat
1-3/4” X 98-7/8”

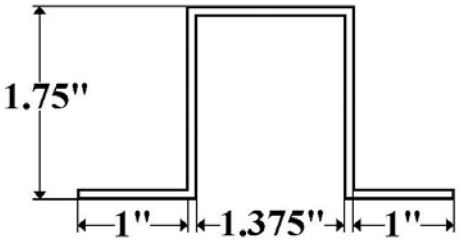

Part SU4 - Supreme Mini Rear Corner Post Steel

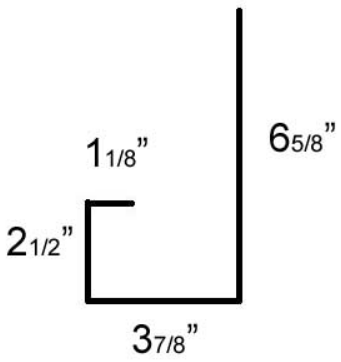

OEM # 015520938

Part SU5 - Supreme Rear Header Steel 4.25X96"

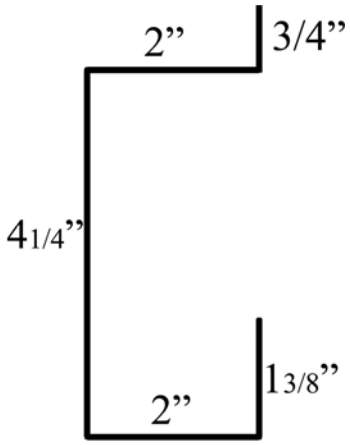

Connectors

Part 01020 (108”) & 01020/112 (112”)- Morgan Vertical Connector GVSD

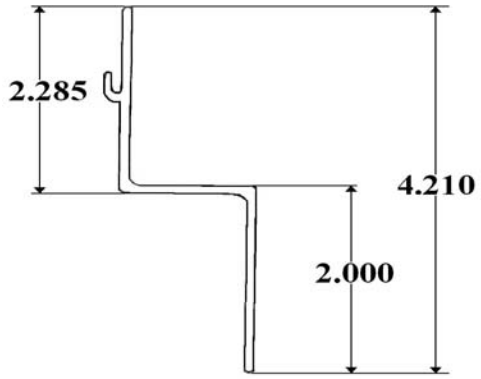

OEM # 00165

Part 01021- Morgan Vertical Connector GVFD

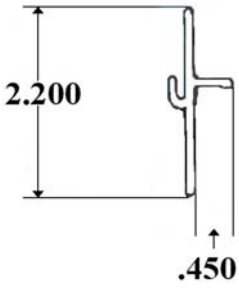

OEM # 001481

Part 01025- Morgan Horizontal Connector GVSD

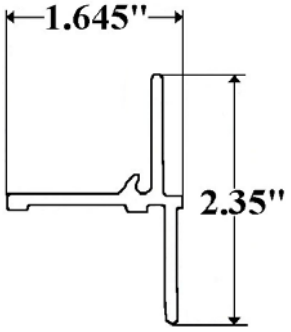

OEM # 14142

Part 01026- Morgan Horizontal Connector GVFD

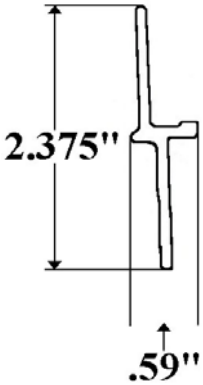

OEM # 6900146

Part 02020- Supreme Vertical & Horizontal Connector VA

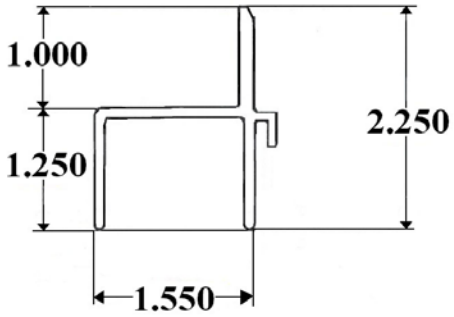

OEM # 002041001

Part 02029/96 & 02029/102 — Supreme Signature Series (Duraplate Body) Horizontal Connector

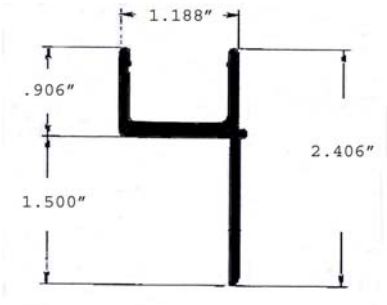

02029/96 OEM# 002011173003
02029/102 OEM# 002011173007

Part 03020R&L-Utilimaster Vertical Connector Aluminum Body 108”

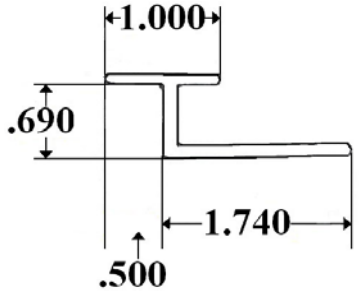

Please Specify Right or Left
03020L OEM # 06918985
03020R OEM # 06918987

Part 05020 - Kidron Vertical Connector for Aluminum Body

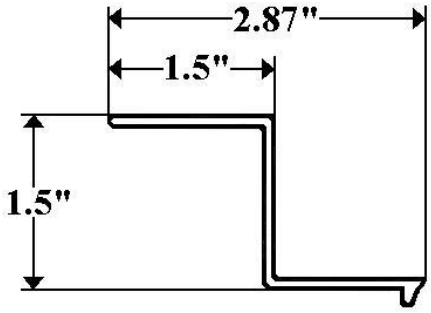

Part 06020- 108” Mickey Vertical Connector

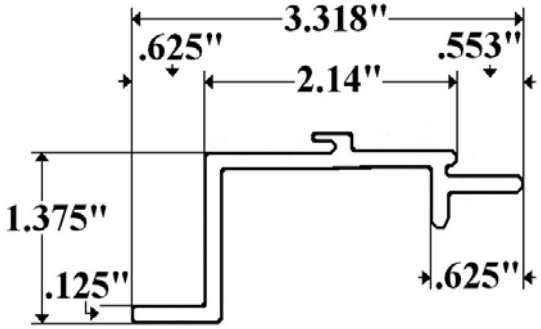

Part 077020- ABC Body Connector

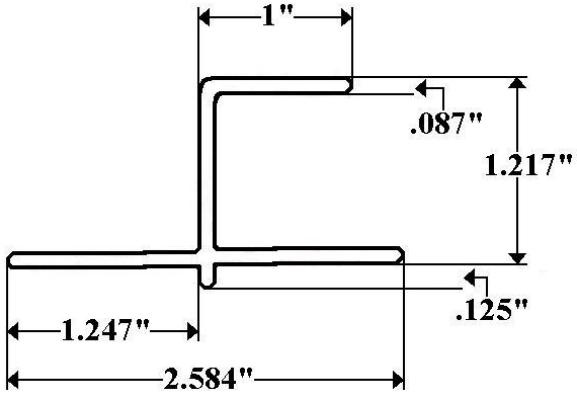

Part 333-2- Vertical Connector U.S. Truck

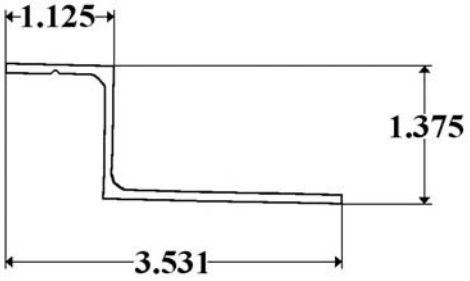

Part S5022-Front Vertical Connector Grumman Aluminum Body

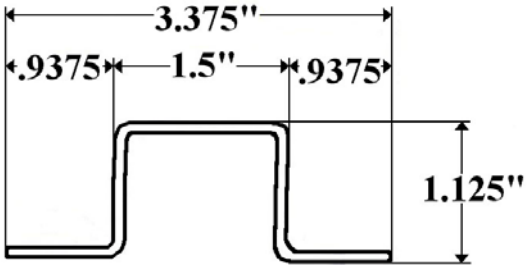

Roof Bows

Part 10250 (96”)- Starter Bow Duralite

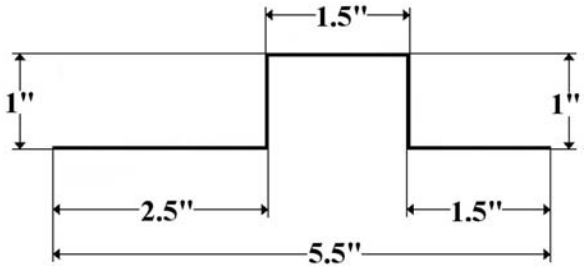

Part 1050/92 (92”) & 98 (98”)-
1-3/8” Morgan Starter Bow

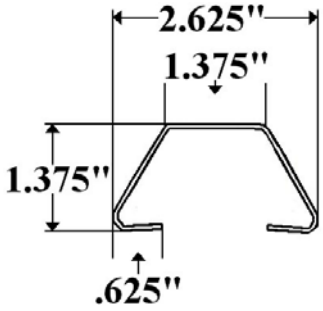

Reverse Arch

Part 1050/92M (92”) & 98M (98”)-
1-3/8” Morgan Starter Bow with Tab

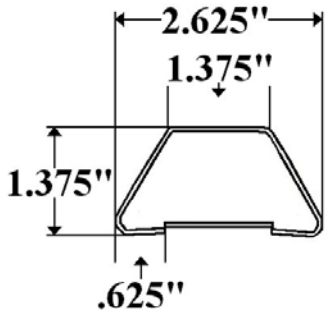

Reverse Arch

Part 1050/92-1 (92”) & 98-1 (98”)-
1” Morgan Starter Bow

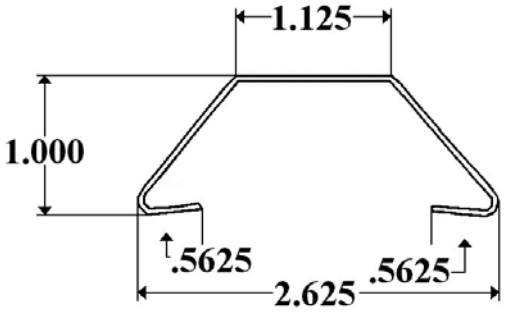

Reverse Arch

Part 1050/92-1M (92”) & 98-1M (98”)-
1” Morgan Starter Bow with Tab

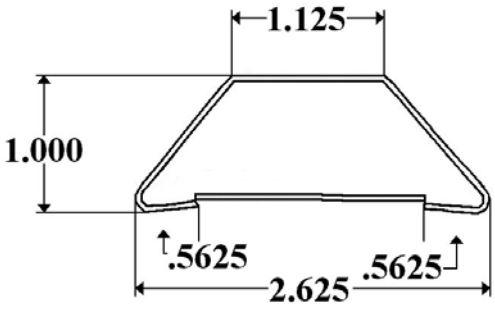

Reverse Arch

Part 2050/91 (91”) & 97 (97”)-
Starter Bow Supreme

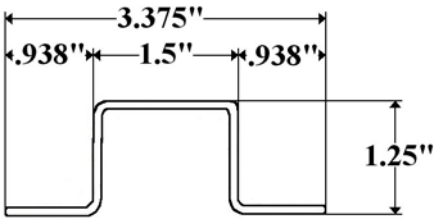

Part 3050/92.5 (92.5”) & 98.5 (98.5”)-
Starter Bow Utilimaster

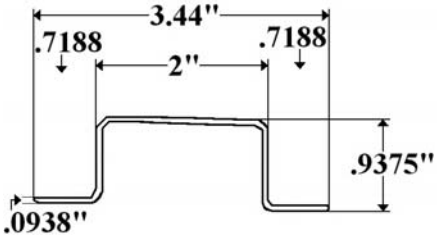

Part 321-1C (88.5”), 1D (92.5”) &
321-1E (98.5”)–
Utilimaster, A.M. Haire Roof Bow

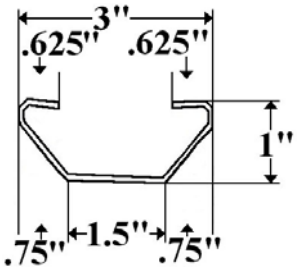

Part 332-2– 1-3/8” Morgan Reefer
Roof Bow
Used Thru 3/97

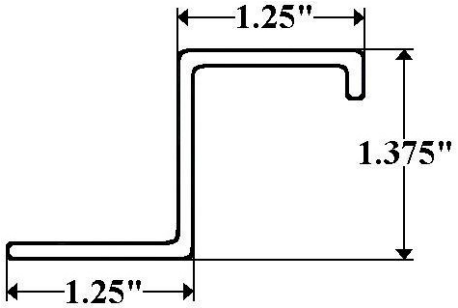

Part 335-2– Morgan Reefer Roof Bow
1” Used From 4/97

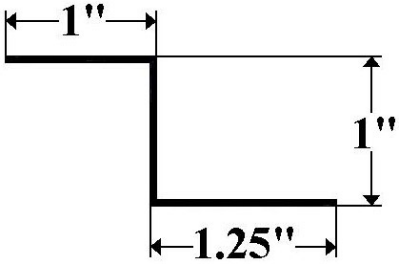

Part 390-1D (93”) & 1E (99”)-
Modern Wagon Roof Bow

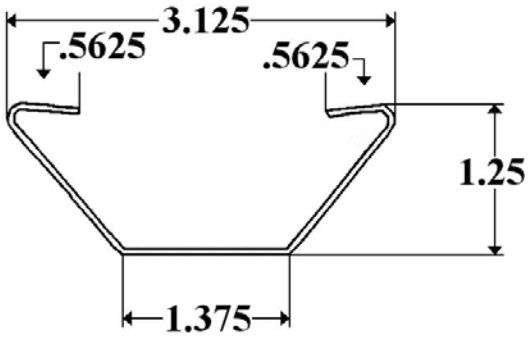

Part 419-1D (92.5) & 419-1E (98.5)-
1-3/8” Roof Bow Grumman

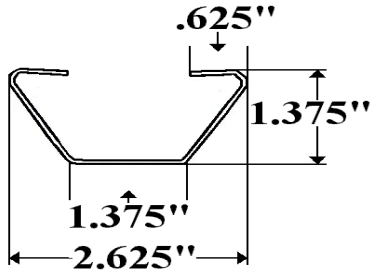

Part 420-1D (92”) & 1E (98”)-
1” Roof Bow Morgan

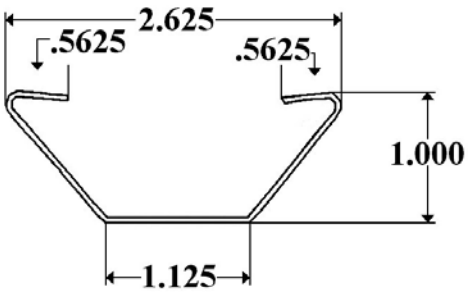

Part 421-1D (92”) & 1E (98”)– Morgan, U.S., Babb, Mickey, Trail-R-Van, Jannell and others
1-3/8” Roof Bow

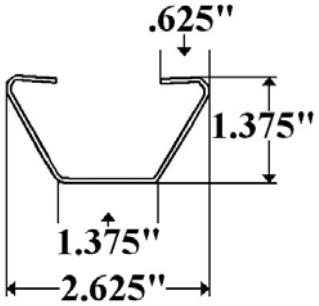

Part 427-1 (92”) & 427-1/98 (98”)- 1-3/8”
Starter Bow U.S. Truck, Jannell, Mickey

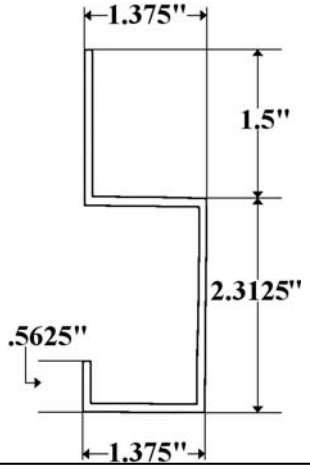

Part 500-1D - Kidron Dry Freight Roof Bow 9” Radius New Style 91”

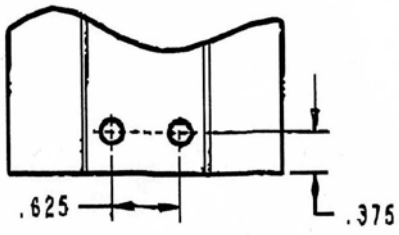

Part 500-1E - Kidron Dry Freight Roof Bow 9” Radius New Style 97”

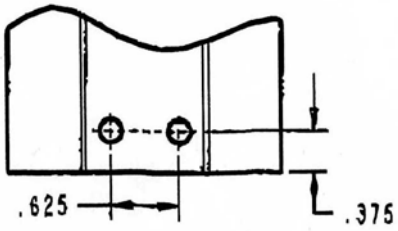

Part 521-1D (91”) & 521-1E (97”)- 1-1/4” Roof Bow Supreme

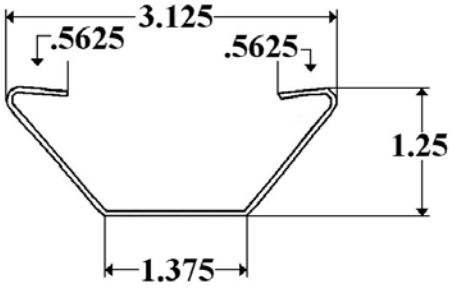

Old Style — Obsolete — see adjacent

Part 521-1D (91”) & 521-1E (97”)- 1-1/4” Roof Bow Supreme New Style

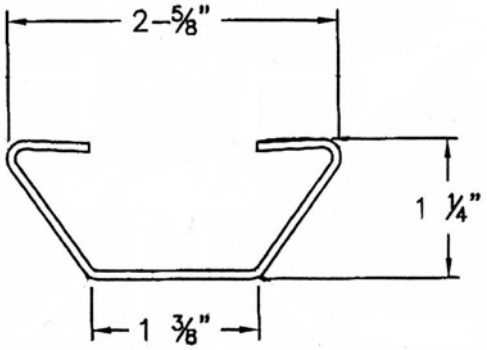

Part 7050/98- 1” Starter Bow A.M. Haire

Fits up to 102” Wide Bodies

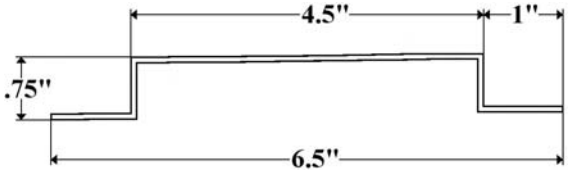

14 Ga. Galvanized

Part 820-1D (93-1/2”) &1E (99-1/2”)- 1” Roof Bow American Commercial

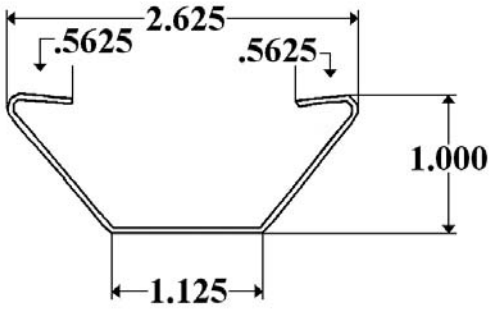

Part S2022- Supreme Roof Bow
Reefer Body

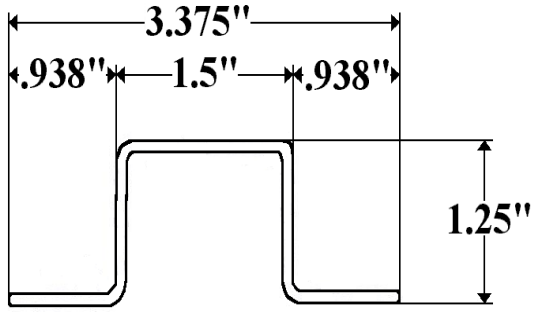

Part S3022– Kidron Steel Roof Bow,
ABC Roof Bow

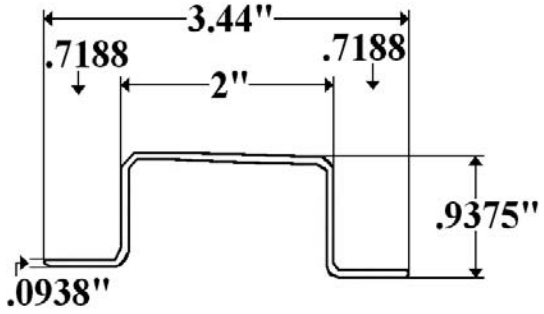

Part S5022- ABC Roof Bow & Side Post

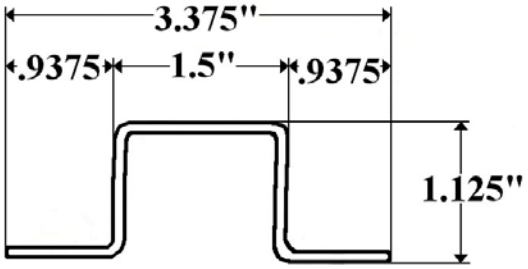

Part S9922- Marathon/Satellite/Metro
Steel Hat Roof Bow
1-3/4” X 98-7/8”

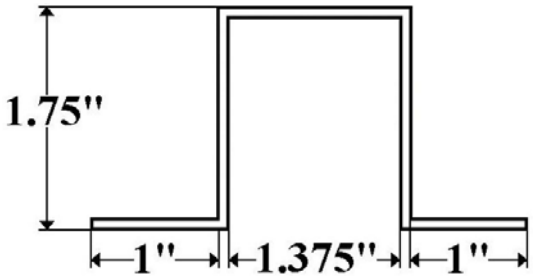

Corner Caps & Aluminum Castings

Part 1038- Supreme VF Rear Cap For Square Rear Corner Post

Part 1041– Supreme VA Rear Cap For Square Rear Corner Post

Part 1064- Murphy Right/Front Cap

Part 1065- Murphy Left/Front Cap

Part 1201- Duralite Left/Front Cap

16” Radius

Part 1202- Duralite Right/Front Cap

16” Radius

Part 1211- Duralite Left/Front Cap

10” Radius

Part 1212- Duralite Right/Front Cap

10” Radius

Part 1401- Duralite Right/Rear Cap

Part 1402- Duralite Left/Rear Cap

Part 226- Morgan Hinge Butt
New Style

Part 322-5- End Cap

Used with 305 and 305-2 Extrusions

Part 3950L- Delta, Gindy, Vanco Left/ Front Cap

Part 3950R- Delta, Gindy, Vanco Right/ Front Cap

Part 3963- Duralite Front Cap For Straight Roof

Part 418-5- U.S. Truck Left/Front Cap

Obsolete Use FP438-5

Part 419-5- U.S. Truck Right/Front Cap

Obsolete Use FP439-5

Part 429-5- U.S. Truck Front Cap For Straight Roof

Part 531- End Cap

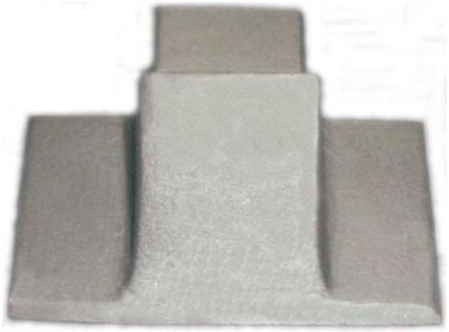

For RR531 Extrusion

Part 619- End Cap *UPS*

For RR619 Extrusion

Part 671- Morgan Hinge Butt

Uses 8730 Pin, 4141 & 4161 Hinge

Part 6971- Morgan End Cap

For RR1000 Extrusion

Part 7000B- A.M. Haire *Old Style* Front Bottom Cap

OBSOLETE

Part 7000L- A.M. Haire *Old Style* Left/Front Cap

OBSOLETE

Part 7000R- A.M. Haire *Old Style* Right/Front Cap

OBSOLETE

Part 9004- End Cap

Use With RR9004 Rub Rail

Part 971- Duralite *Old Style* Rear Cap

Part AC1052- Delta QX Front Cap

Part AC816- Delta QX Rear Cap

Part AC2165L- Delta QX/ Theurer Left/Front Cap

Part AC2165R- Delta QX/ Theurer Right/Front Cap

Part CON-L- Continental
Left/Front Cap

Part CON-R- Continental
Right/Front Cap

Part CON-S- Continental Front Cap
Straight Roof

Part FC101- Trail-R-Van Front Cap

Part FC102– Trail-R-Van Front Bottom Cap

Also Babb *Old Style*

Part FC111- Trail-R-Van Front Cap

Part FC201R- Jannell Right/Front Cap

Part FC202L- Jannell Left/Front Cap

Part FP1000L– Morgan Left/Front Cap

Part FP1000R– Morgan Right/Front Cap

Part FP1050L– Morgan Left/Front Mini-Cap

Part FP1050R- Morgan Right/Front Mini-Cap

Part FP1100L- Morgan Plastic
Left/Front Cap

Mounts behind Corner Radius and under Roof Radius

Part FP1100R- Morgan Plastic
Right/Front Cap

Mounts behind Corner Radius and under Roof Radius

Part FP1200L- Morgan Plastic
Left Front Cap
2002 Version

Mounts over Corner Radius and over Roof Radius

Part FP1200R- Morgan Plastic
Right Front Cap
2002 Version

Mounts over Corner Radius and over Roof Radius

Part FP2000A- Supreme VA Rear Cap

Part FP2000F- Supreme VF Rear Cap

Part FP2000L- Supreme Left/Front Cap

Part FP2000R- Supreme Right/Front Cap

Part FP2000S– Supreme Spartan Body Front or Rear

Part FP3000AF– Utilimaster Rear Cap

Part FP3000L– Utilimaster Left/Front Cap

Part FP3000R– Utilimaster Right/Front Cap

Part FP3100L– Utilimaster Left/Front Corner Cap *New Style*

Part FP3100R– Utilimaster Right/Front Corner Cap *New Style*

Part FP3107L– Utilimaster Left Rear Corner Cap, New Style

Used with 3007 Top Rail

Part FP3107R– Utilimaster Right Rear Corner Cap, New Style

Used with 3007 Top Rail

Part FP3900L- Modern Wagon Left/Front Corner Cap

Part FP3900R- Modern Wagon Right/Front Corner Cap

Part FP4000AF– Grumman Rear Corner Cap

Part FP4000L– Grumman Left/Front Cap

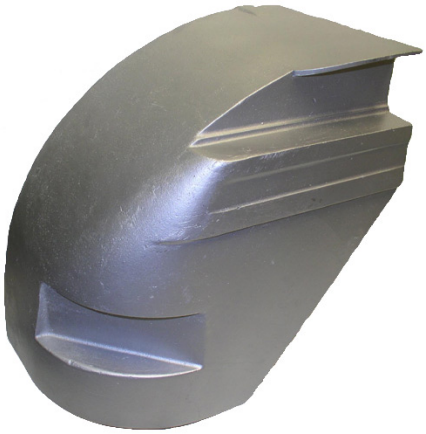

Part FP4000R– Grumman Right/Front Cap

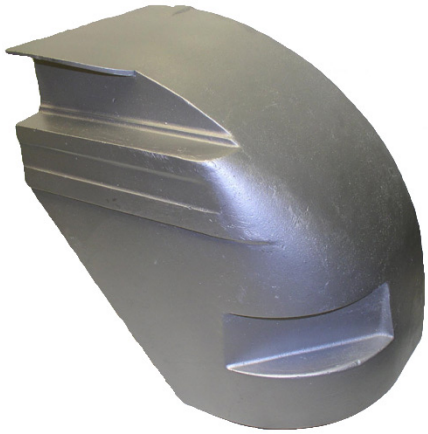

Part FP407-5– U.S. Truck Rear Cap

Used on Front with Square Front Corner Post

Part FP4100L– Grumman Left/Front Plastic Cap

Part FP4100R– Grumman Right/Front Plastic Cap

Part FP438-5- U.S. Truck Left/Front Cap

Part FP439-5- U.S. Truck Right/Front Cap

Part 450L -- U.S. Truck Left/Front Cap New Style

Part 451R- U.S. Truck Right/Front Cap New Style

Part FP4500L- Grumman Left/Front Cap

Part FP4500R- Grumman Right/Front Cap

Part FP4510L- Grumman Left/Front Cap

Grumman Family Van

Part FP4510R- Grumman Right/Front Cap

Grumman Family Van

Part FP5000L- Kidron Left/Front Reefer Cap

Part FP5000R- Kidron Right/Front Reefer Cap

Part FP5010L- Kidron Left/Front Cap

Part FP5010R- Kidron Right/Front Cap

Part FP5100L- Kidron Left/Front Cap

Part FP5100R- Kidron Right/Front Cap

Part FP5500L- Kidron Left/Front Cap Dry Freight

Part FP5500R- Kidron Right/Front Cap Dry Freight

Part FP6000L- Mickey Left/Front Cap

Obsolete use FP6500L

Part FP6000R- Mickey Right/Front Cap

Obsolete use FP6500R

Part FP6500L- Mickey Left/Front Corner Cap

Part FP6500R- Mickey Right/Front Corner Cap

Part FP7000L- A.M. Haire Left/Front Cap

Part FP7000R- A.M. Haire Right/Front Cap

Part FP7700AF- ABC (Alum. Body Corp.) Rear Corner Cap

Part FP7700L- ABC (Alum. Body Corp.) Left/Front Corner Cap

Part FP7700R- ABC (Alum. Body Corp.) Right/Front Corner Cap

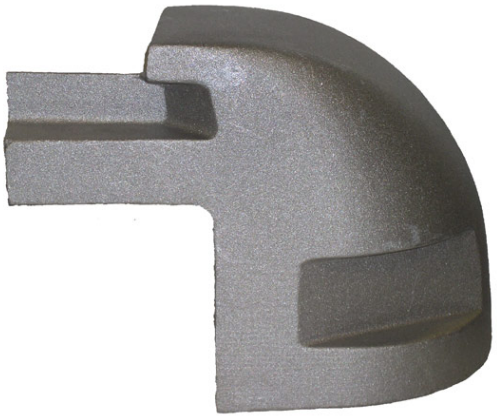

Part FP800LF- Grumman V-Body Left/Front Cap

Part FP800RF- Grumman V-Body Right/Front Cap

Part FP800LR– Grumman V-Body Left/Rear Cap

Part FP800RR– Grumman V-Body Right/Rear Cap

Part FP8000L- American Commercial (American's Body Co.) Left/Front Cap

Part FP8000R- American Commercial (American's Body Co.) Right/Front Cap

Part FP9000L- Babb *Old Style*
Left/Front Cap

Part FP9000R- Babb *Old Style*
Right/Front Cap

Part FP9500L- Babb *New Style*
Left/Front Corner Cap

Part FP9500R- Babb *New Style*
Right/Front Corner Cap

Part FP9900AF-
Marathon/Satellite/Metro
Rear Corner Cap

Part FP9900L- Marathon/Satellite/Metro
Left/Front Corner Cap

Part FP9900R- Marathon/Satellite/Metro
Right/Front Corner Cap

Part FP9950L- Marathon
Left/Front Corner Cap *New Style*

Part FP9950R- Marathon
Right/Front Corner Cap *New Style*

Part RC101– Morgan, Jannell, Trail-R-Van Rear Casting

Part RC6943– Morgan Rear Casting

Aluminum Extrusions

Part 00054- Duralite Corner Post- Aluminum Body

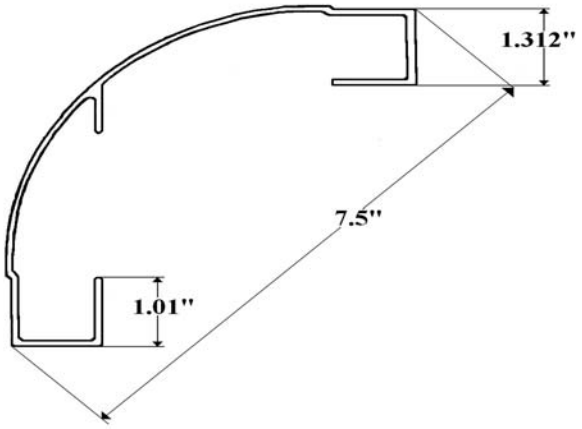

Part 00117- Duralite Top Rail

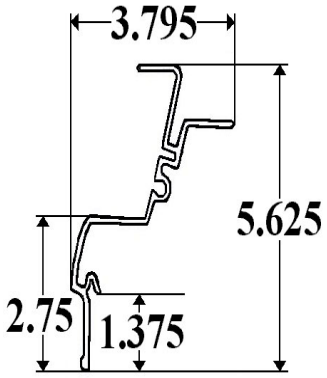

Part 001J/96 (8') 001J/120 (10') & 001J/144 (12')- J-Molding

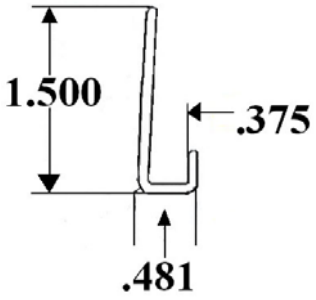

Must use with Translucent Roof

Part 01020 (108") & 01020/112 (112")- Morgan Vertical Connector GVSD

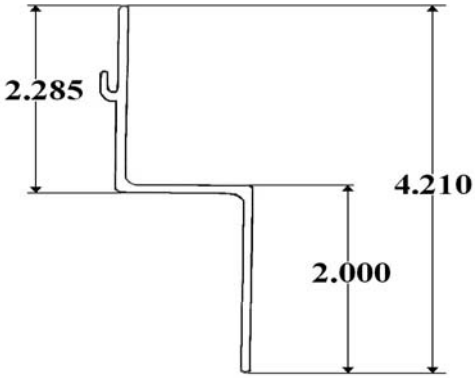

OEM # 00165

Part 01021- Morgan Vertical Connector GVFD

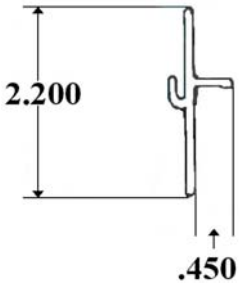

OEM # 001481

Part 01025- Morgan Horizontal Connector GVSD

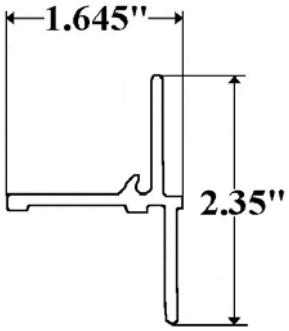

OEM # 14142

Part 01026- Morgan Horizontal Connector GVFD

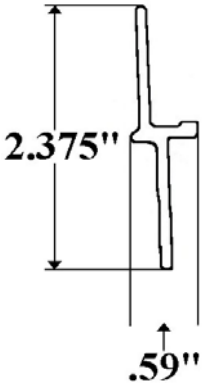

OEM # 6900146

Part 02020- Supreme Vertical & Horizontal Connector VA

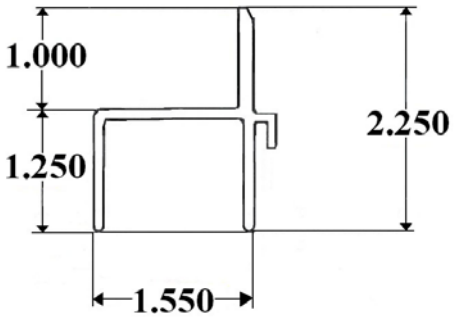

OEM # 002041001

Part 02029/96 & 02029/102 — Supreme Signature Series (Duraplate Body) Horizontal Connector

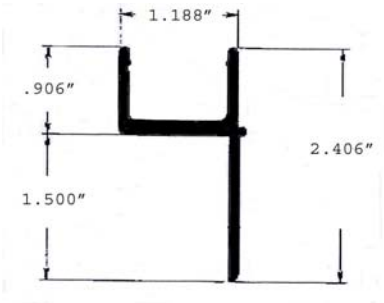

02029/96 OEM# 002011173003
02029/102 OEM# 002011173007

Part 03020R&L-Utilimaster Vertical Connector Aluminum Body 108”

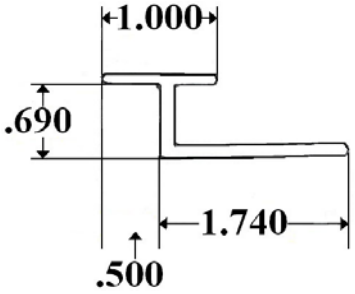

Please Specify Right or Left
03020L OEM # 06918985
03020R OEM # 06918987

Part 05020- Kidron Vertical Connector for Aluminum Body

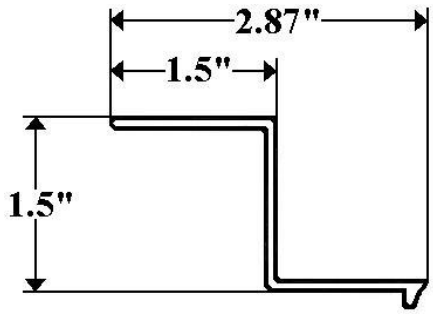

Part 06020- 108” Mickey Vertical Connector

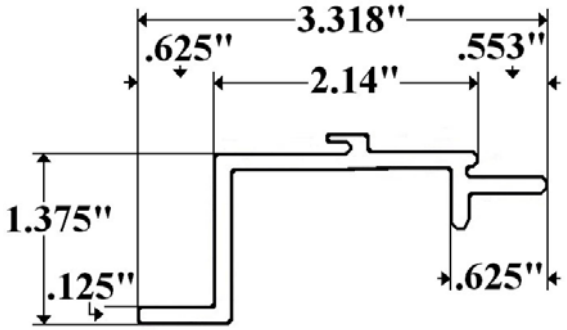

Part 077020- ABC Body Connector

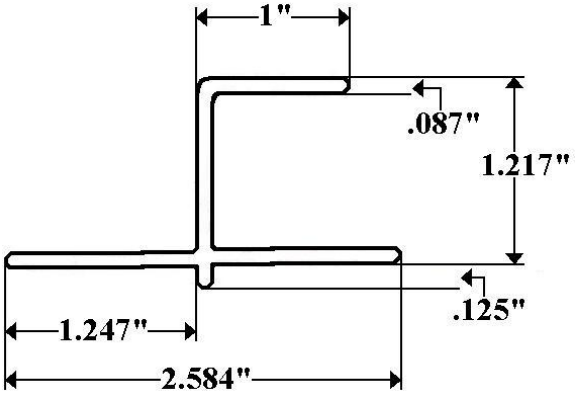

Part 08020 - American Commercial (America’s Body Co.) Connector and Universal Rail

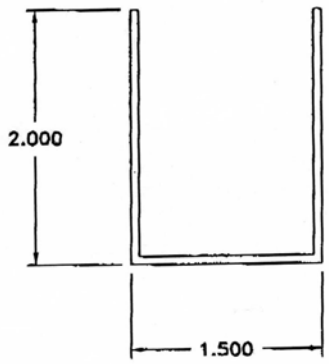

Part 1001- Morgan Top Rail GVSD Aluminum Body*As of 10/2008*

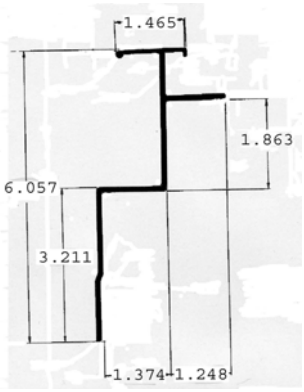

OEM # 00015904

Part 1001F- Morgan Top Rail GVFD FRP Body*As of 10/2008*

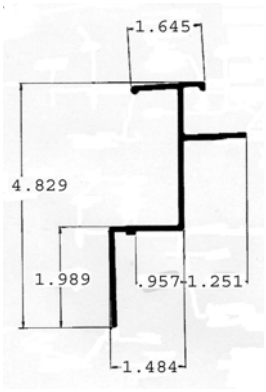

OEM #

Part 1002- Morgan Top Rail 1-3/8 Roof Bow GVSD *Thru 3/97*

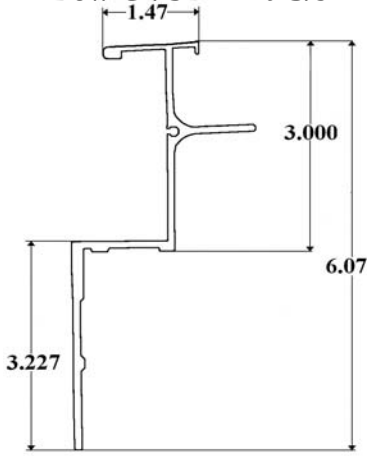

Part 1002F- Morgan Top Rail 1-3/8 Roof Bow GVFD *Thru 3/97*

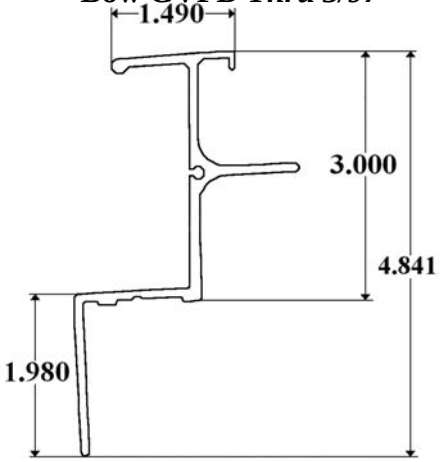

Part 1003- Morgan Bottom Rail GVFD & GVSD

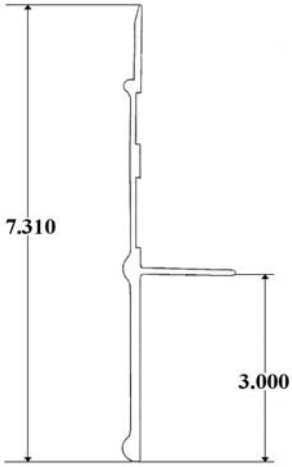

Part 1005- Morgan Bottom Rail GVFD *New Style*

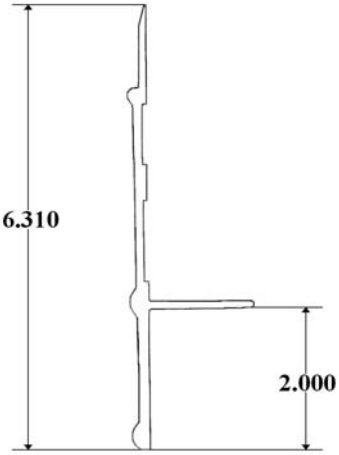

Part 1006- Morgan Top Rail GVSD *New Style* 1" Roof Bow

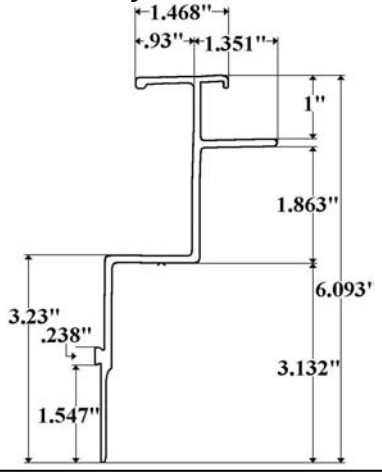

Part 1006F- Morgan Top Rail GVFD *New Style* 1" Roof Bow

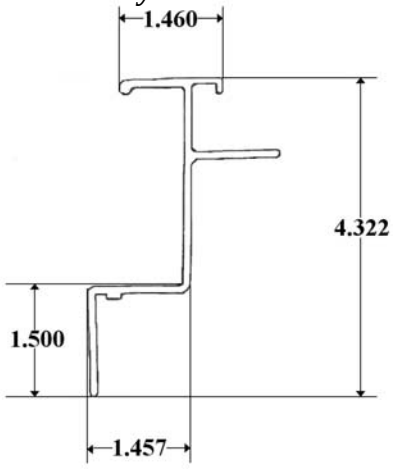

Part 1007F- Morgan Top Rail GVFD
1" Roof Bow ***New for 2003***

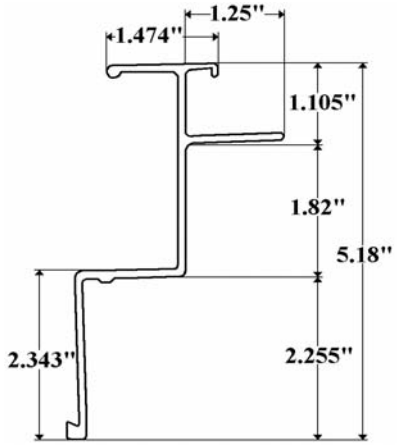

Part 1008F- Morgan Bottom Rail GVFD
From 97 to Present

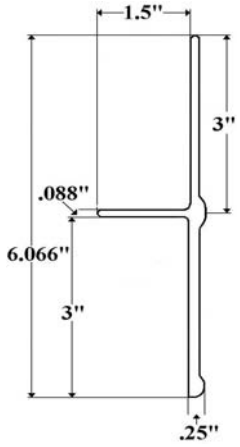

Part 1009- Morgan Top Rail GVSD
1" Roof Bow ***From 4/97***

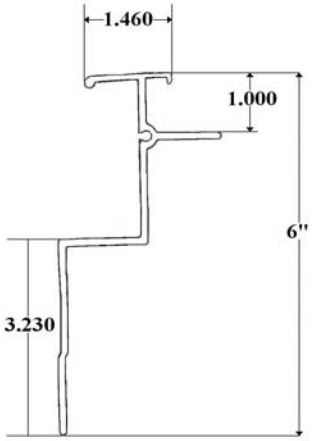

Part 1009F- Morgan Top Rail GVFD
1" Roof Bow ***From 4/97***

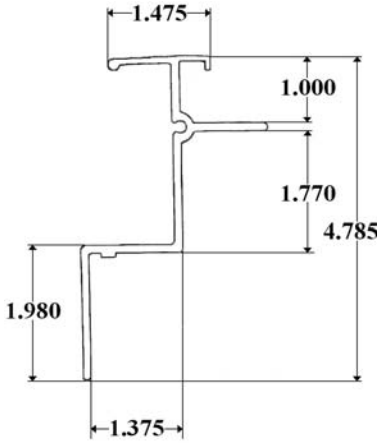

Part 1022- Morgan Aluminum Hat Post

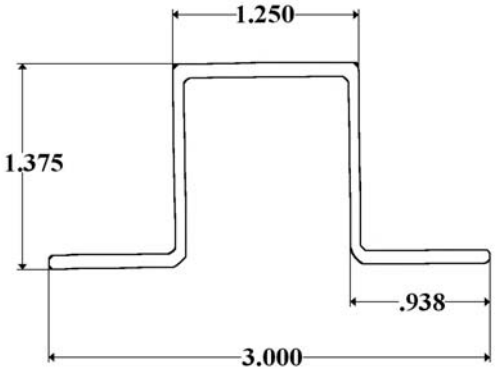

Part 2002- Supreme Upper Top Rail
VA or IA

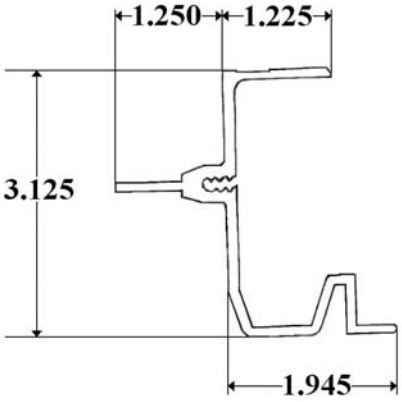

Lower Use Universal Rail (UR)

Part 2002F- Supreme Top Rail
VF or IF

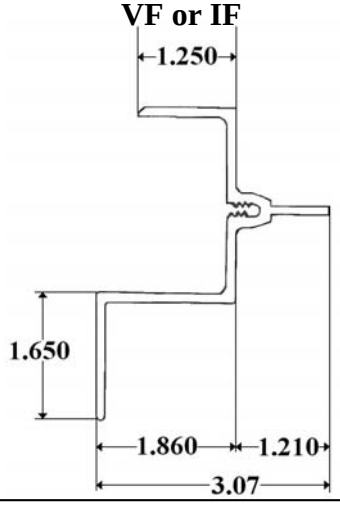

Part 2003- Supreme Bottom Rail
VA or IA

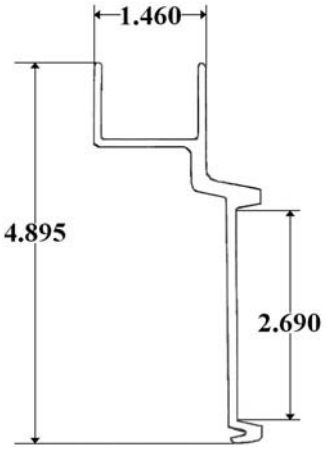

Part 2003F- Supreme Bottom Rail
VF or IF

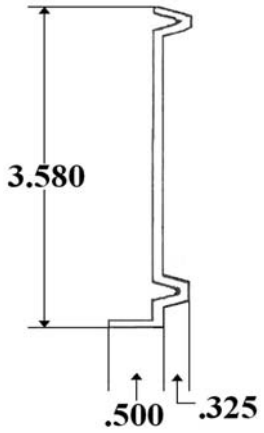

Part 2004F- Supreme Bottom Rail
VF or IF

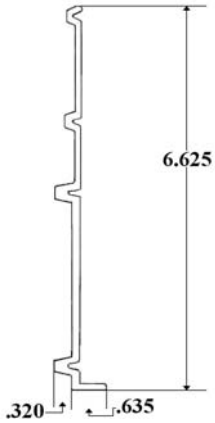

Part 2009- Supreme Upper Top Rail
Aluminum Body New Style

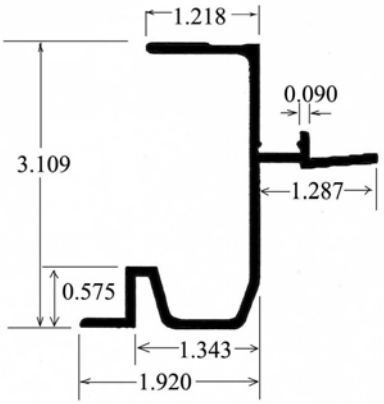

Part 2009F- Supreme Top Rail
VF or IF

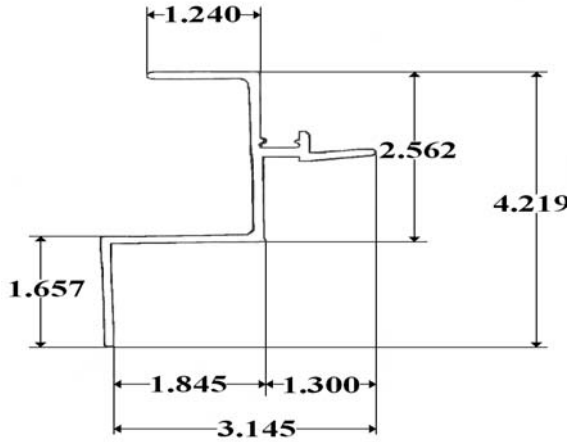

Part 2010E- Supreme Extruded Corner Radius

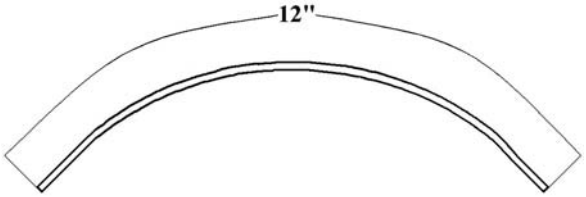

103”

Part 2010MINI - Supreme Mini Front Corner Post Aluminum

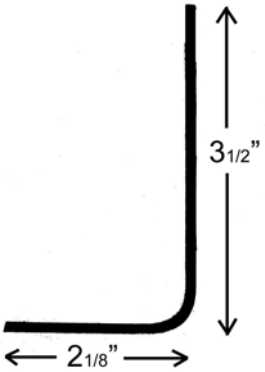

OEM # 002099700007

Part 2117- Top Rail

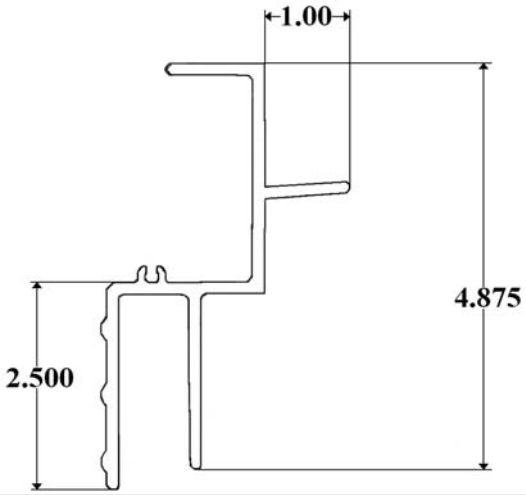

Part 2121-Top Rail

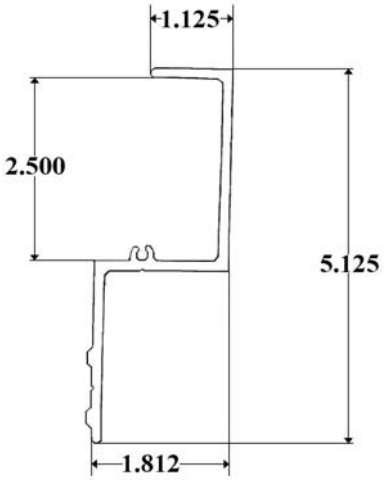

Part 2219- RUB Rail

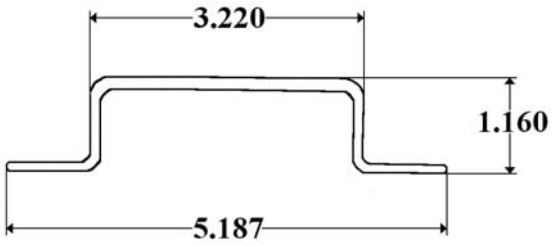

Part 225-2- Hat Post

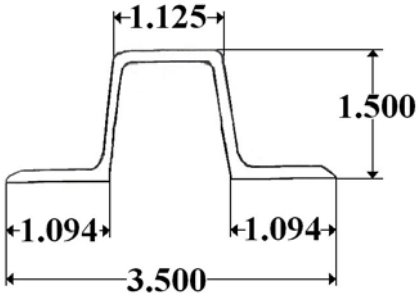

Part 3002- Utilimaster Top Rail

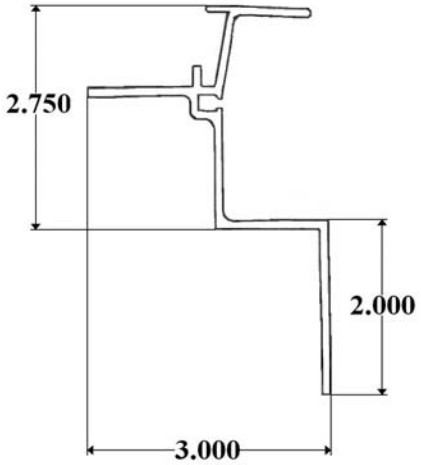

Part 3003- Utilimaster Bottom Rail
Thru 1/98

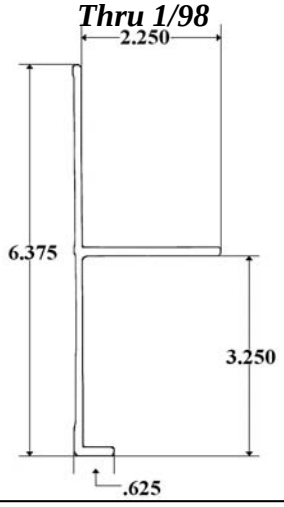

Part 3004- Utilimaster Bottom Rail
From 2/98

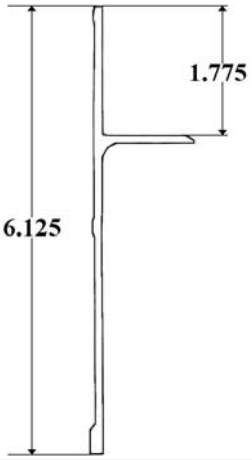

Part 3005- Utilimaster Bottom Rail
New Style

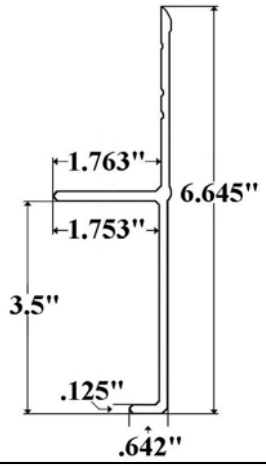

Part 3007– Utilimaster Top Rail

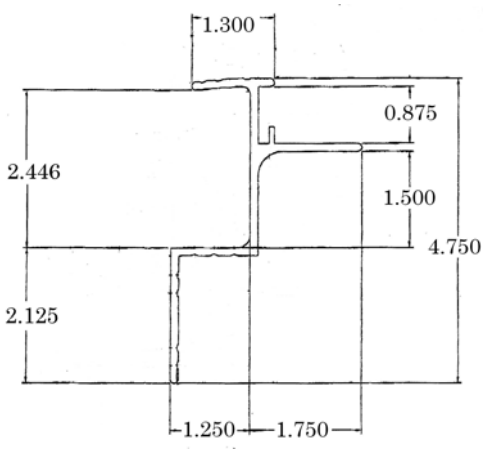

Part 3009- Utilimaster Rear Top Rail

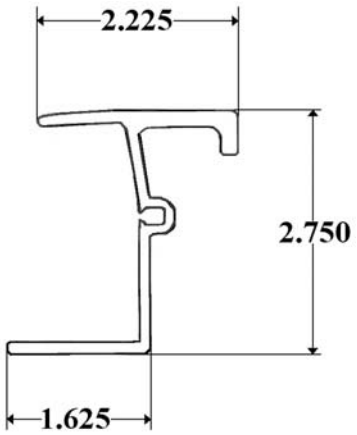

Part 305- U.S. Truck Rub Rail

See Casting #322-5

Part 305-2- Bottom Rail U.S. Truck

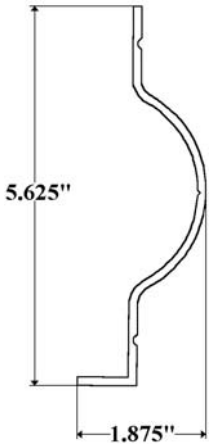

See Casting #322-5

Part 307-2- Bottom Rail U.S. Truck

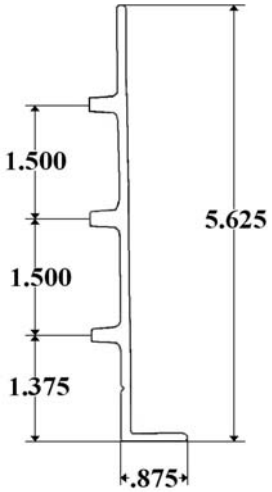

Part 316-2- U.S. Truck Front Corner Post Aluminum Body

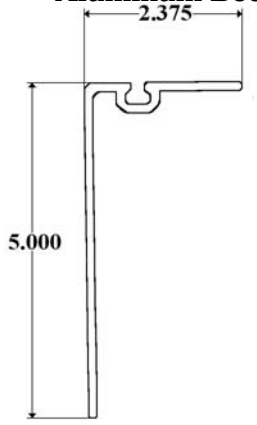

Uses FP407-5 Corner Cap

Part 317-2- Front Corner Post U.S. Truck FRP Body

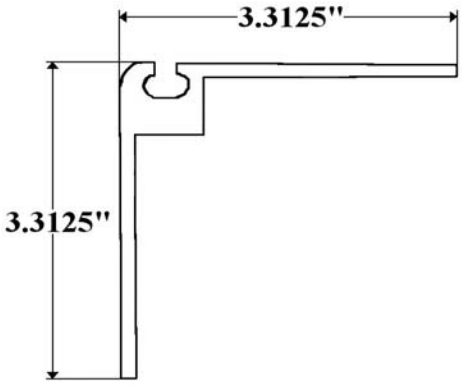

Uses FP407-5 Corner Cap

Part 331-2– Morgan Reefer Roof Bow
1" Used From 4/97

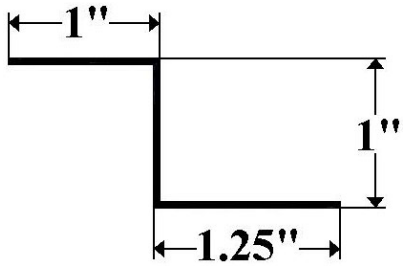

Part 332-2D (97"), 2E (108") & 2F (112")- Aluminum Z-Post Morgan, U.S., Jannell, Grumman, Babb, Mickey, & Others

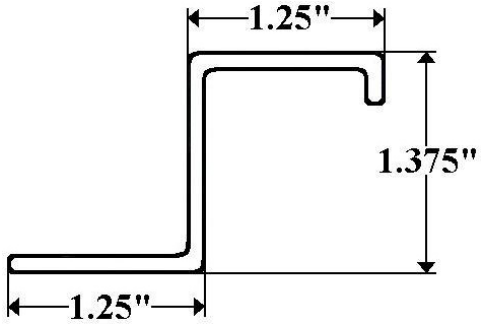

Part 333-2- Vertical Connector U.S. Truck

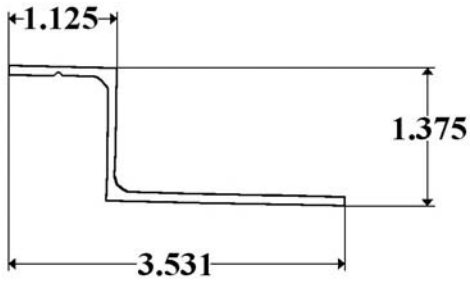

Babb Starter Bow

Part 334-2- Front Corner Post U.S. Truck

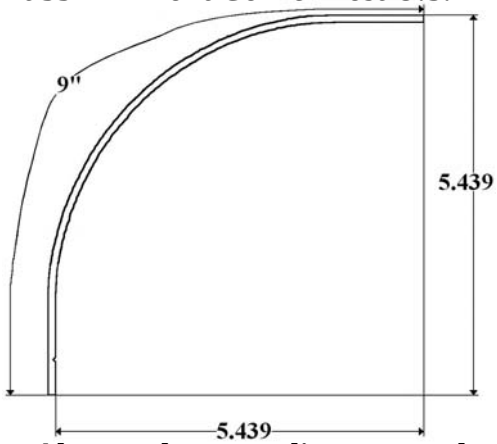

Also Used on Duralite FRP Body

Part 339-2- Hat Post U.S. Truck

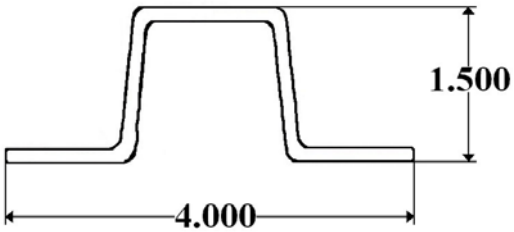

Replace with 225-2

Part 343-2- Edge Molding FRP

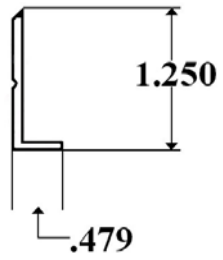

Part 366-2- Top Rail Lower U.S. Truck Aluminum Body

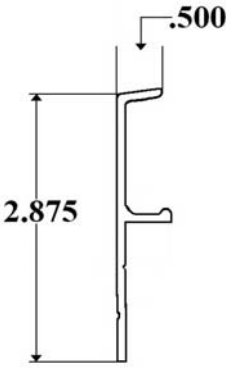

Upper 422-2

Part 367-2 - U.S. Truck Body New Style Top Rail (Lower Piece on Aluminum Body)

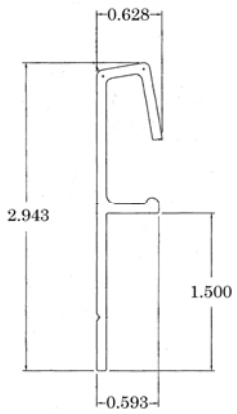

Part 3902- Modern Wagon Top Rail

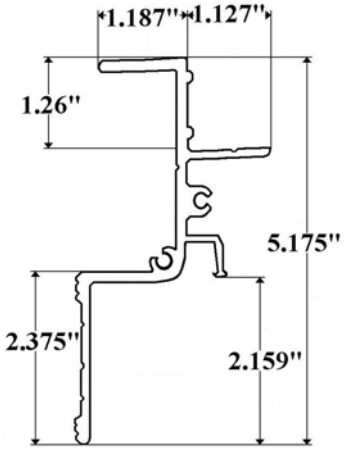

Part 3910E- Modern Wagon Corner Radius

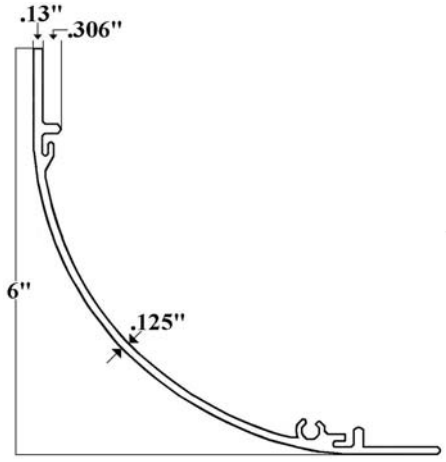

Part 4002- Top Rail Grumman

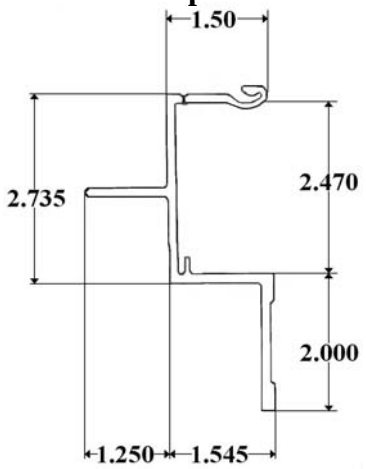

Use with Interlock

Part 4003- Bottom Rail Grumman

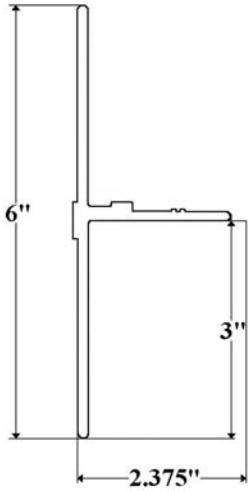

Part 4012– Grumman Roof Radius

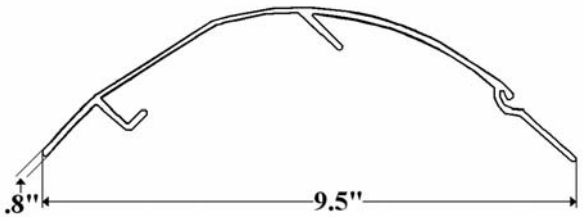

Used with FP4500R&L Corner Caps

Part 4012L- Grumman Roof Radius
Lower of 2 Pieces (Upper #4012U)

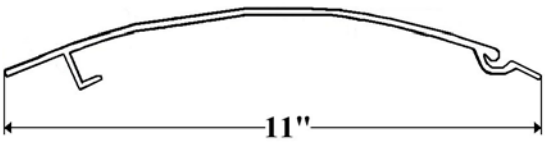

Used with FP4000R&L Corner Caps

Part 4012U- Grumman Roof Radius
Upper of 2 Pieces (Lower #4012L)

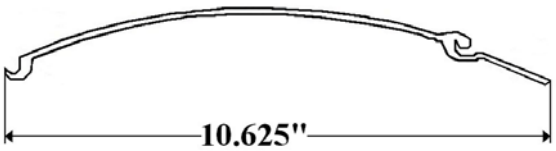

Used with FP4000R&L Corner Caps

Part 4030- Corner Post Grumman & Utilimaster

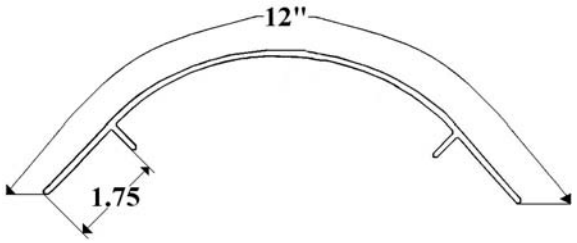

Part 403-2AG- U.S. Truck Top Rail Rear

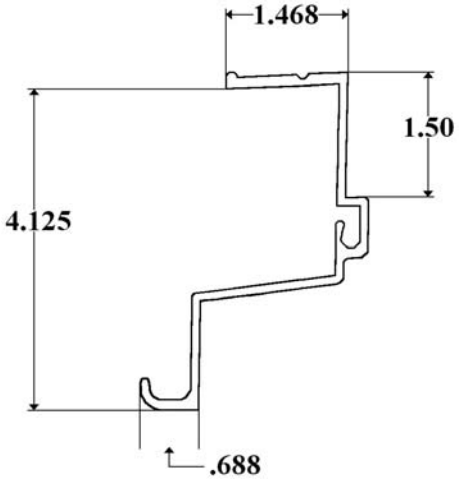

Part 4141- Hinge Morgan Side Door

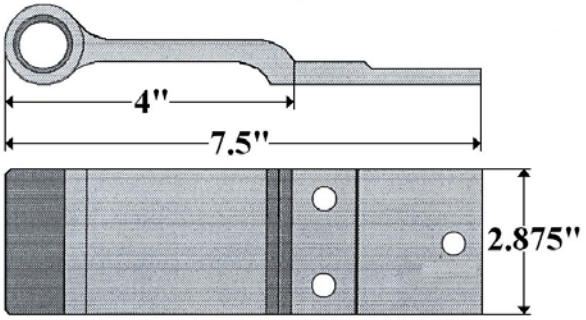

See 671 Butt
See 8730 Pin

Part 4161- Hinge Morgan Rear Door
Used as Side Door Hinge on Reefer Body

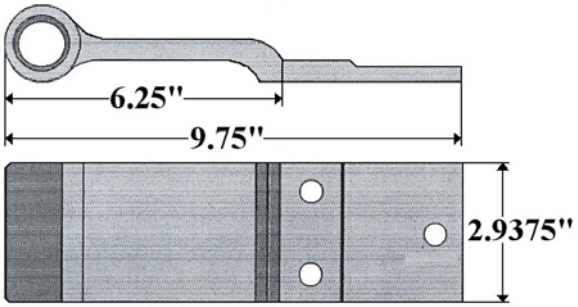

See 671 Butt
See 8730 Pin

Part 422-2- Roof Cove U.S. Truck

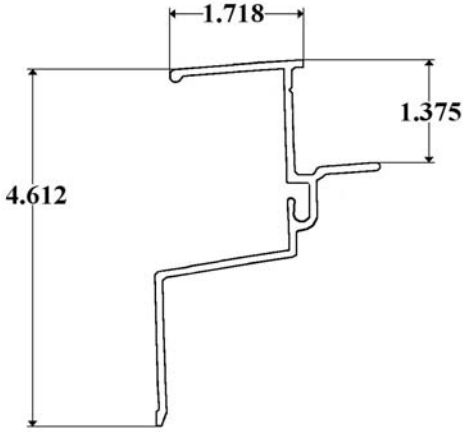

Used with 366-2 Aluminum Body Only

Part 423-2– U.S. Truck Body New Style Roof Cove (Upper Piece on Aluminun & FRP Body)

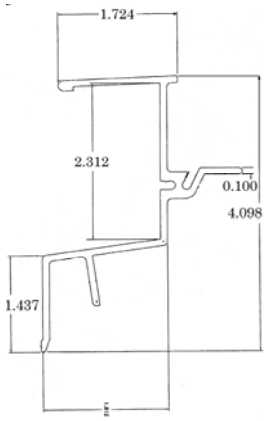

Part 432-2D (107”)- Kidron Aluminum Z-Post

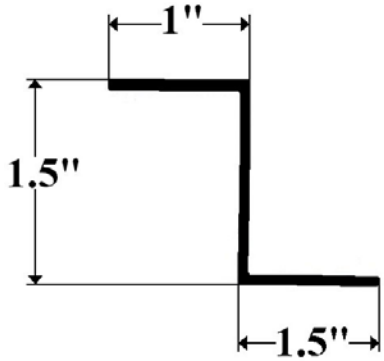

Part 5002- Top Rail Kidron

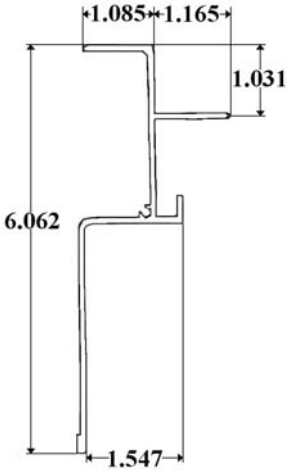

Part 5003– Bottom Rail Kidron

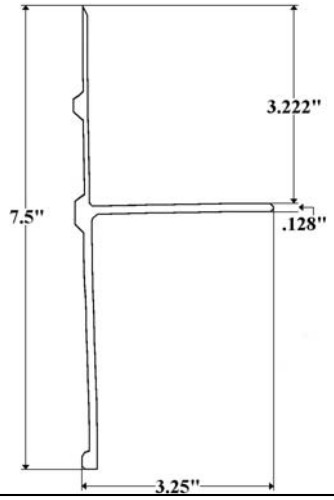

Part 5004- Kidron New Dry Freight Top Rail

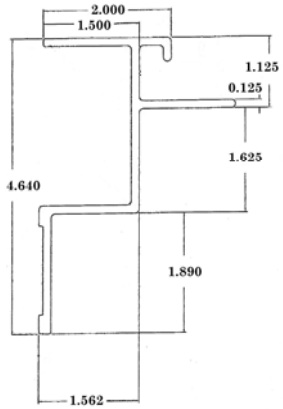

Part 5005 - Kidron Bottom Rail Cargo Star Dry Freight

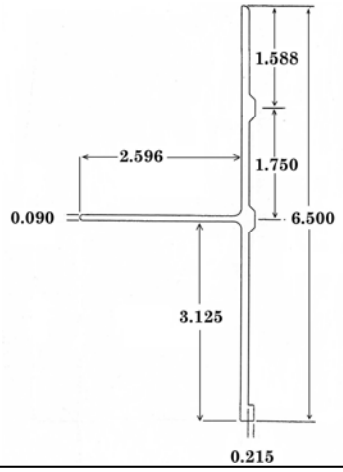

Part 5010E- Kidron Corner Radius Extruded

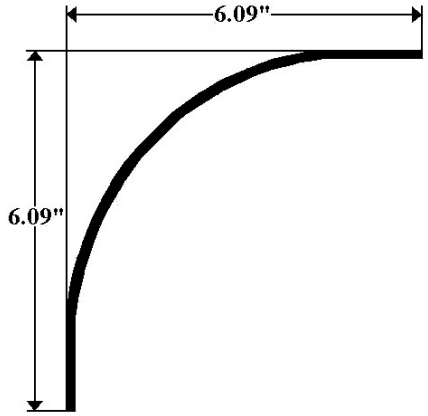

Dry Freight & Reefer

Part 5012E- Kidron Roof Radius Extruded

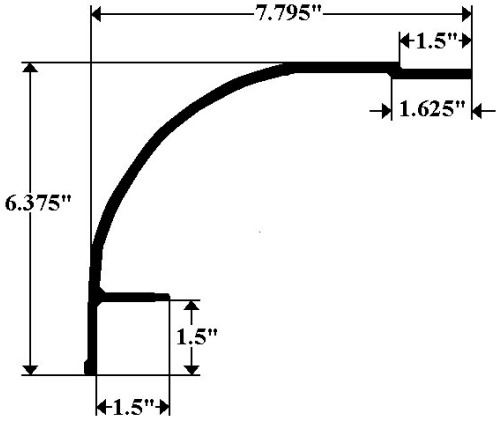

Reefer Body

Part 6002- Top Rail Mickey

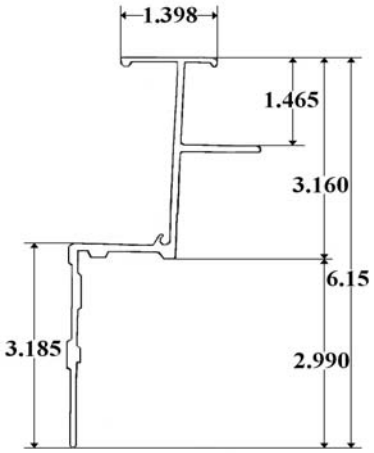

Part 6003- Bottom Rail Mickey

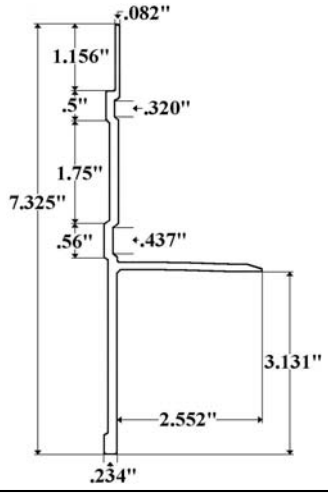

Part 6010E- Front Corner Post Mickey

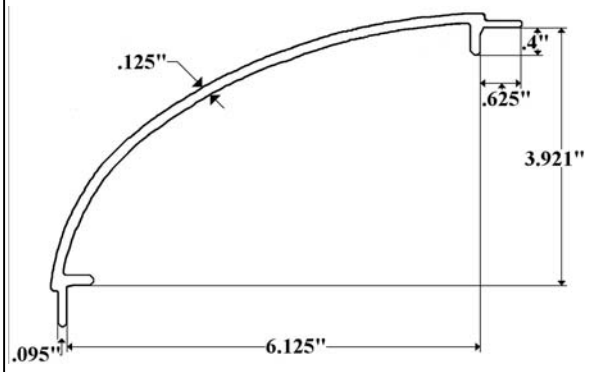

Part 7002- Top Rail A.M. Haire

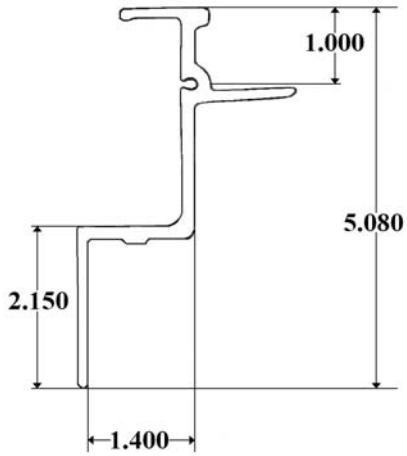

Part 7003– A. M. Haire Bottom Rail

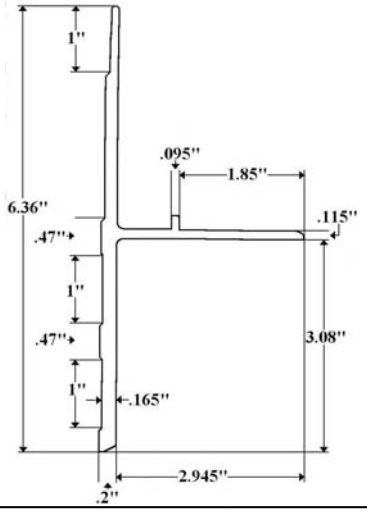

Part 7010 & 7010P (Polished)
Lengths- 98-3/8” & 125-3/8”-
A.M. Haire Front Corner Post

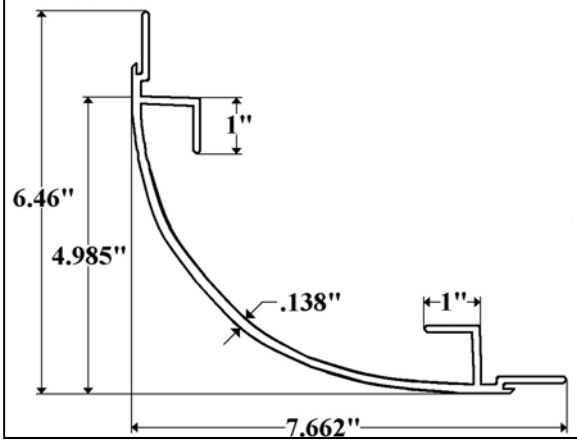

Part 7701- ABC Body Upper Top Rail

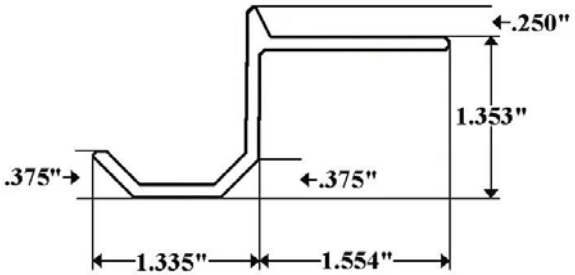

Use #7702 for Lower Top Rail

Part 7702- ABC Body Lower Top Rail

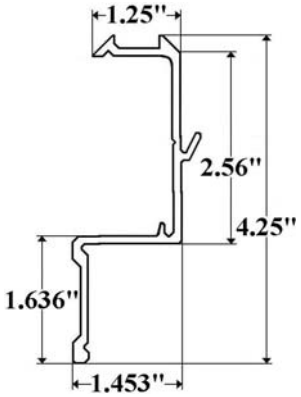

Use #7701 for Upper Top Rail

Part 7703- ABC Body Bottom Rail

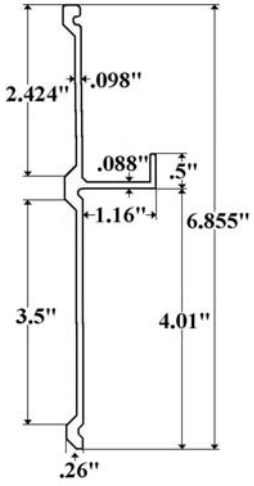

Part 800- FRP Splice

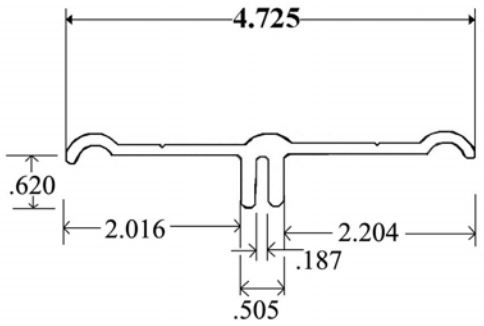

Part 8002- Top Rail A/C

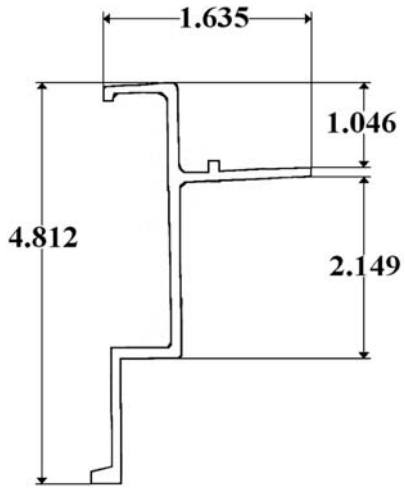

Part 8003- Bottom Rail A/C

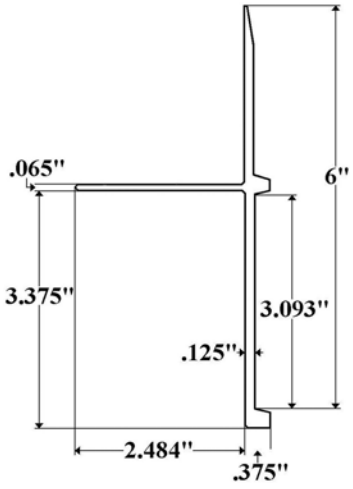

Part 8010E – American Commercial Front Corner Post

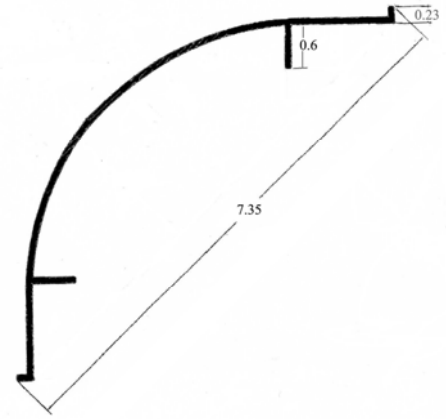

Part 9001- Top Rail Babb *Old Style*

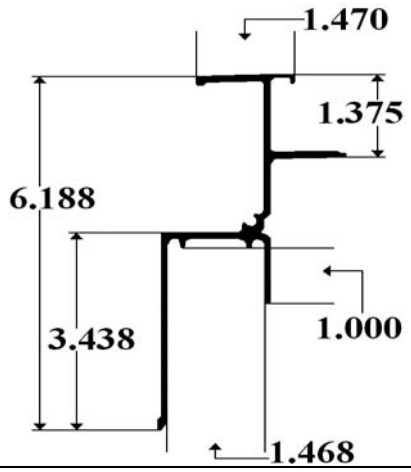

Part 9002- Top Rail Babb *New Style*

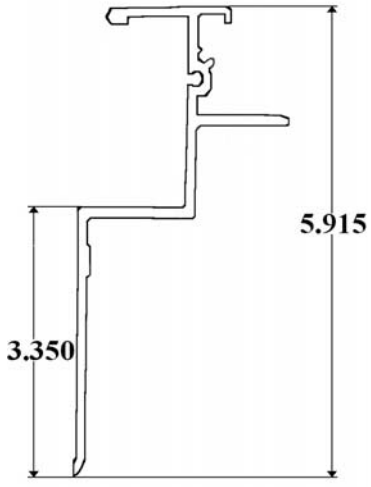

Part 9003- Babb Bottom Rail *New Style*

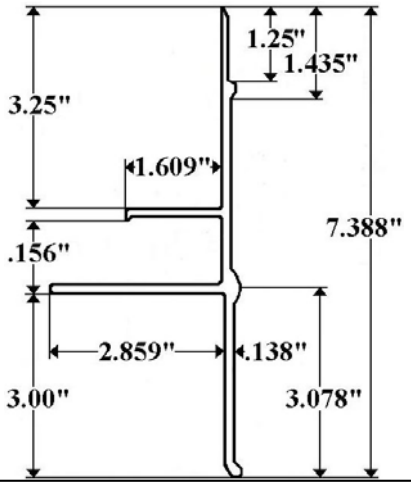

Part 9010/FRP- Babb Corner Post-
FRP Body

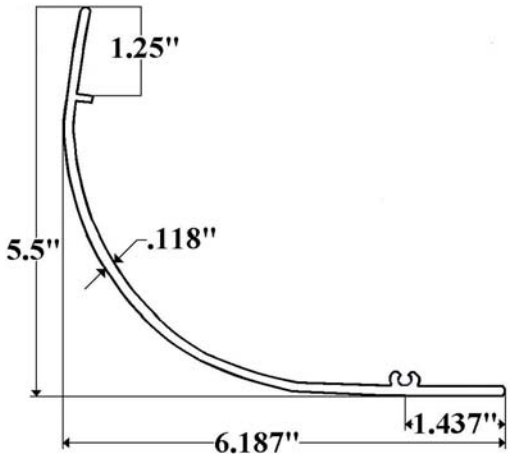

Part 9010E– Babb Corner Post
Aluminum Body

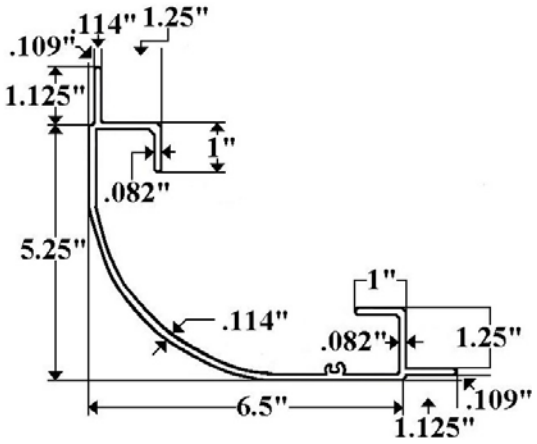

Part 9902- Marathon/Satellite/Metro
Top Rail

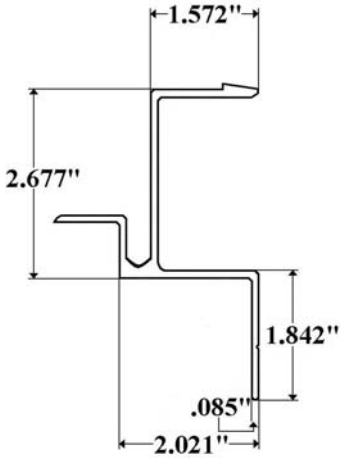

Part 9903F- Marathon/Satellite/Metro
Bottom Rail—*FRP Body*

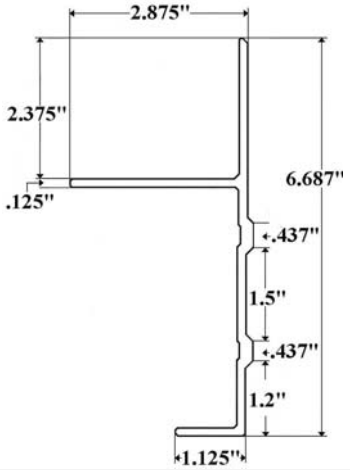

Part 9904– Marathon Bottom Rail
Aluminum Body

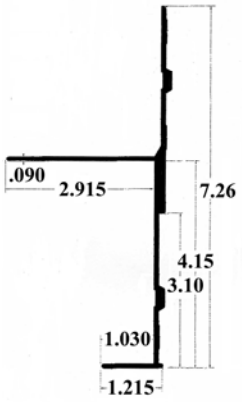

Part 9910E- Marathon/Satellite/Metro
Front Corner Post

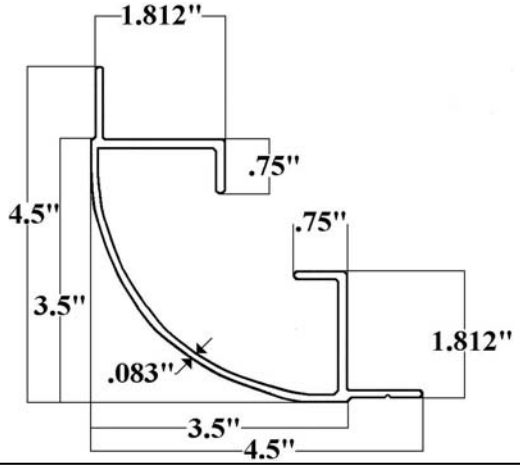

Part AA1/4X3X3X16- Aluminum Angle

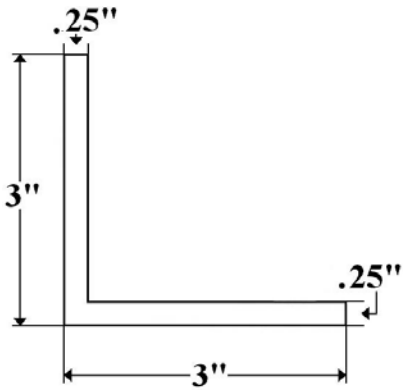

Part AA1/8X1X2X16- Aluminum Angle

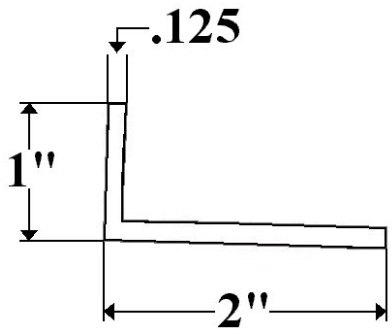

Part AA1/8X1X1X16- Aluminum Angle

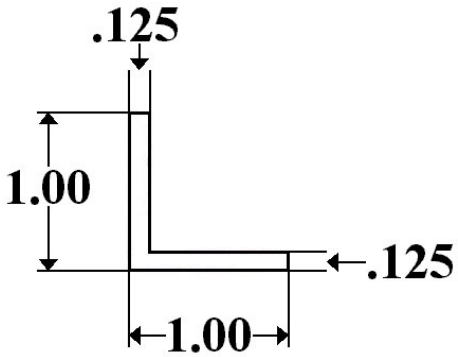

Part AA1/8X1X3X24- Aluminum Angle

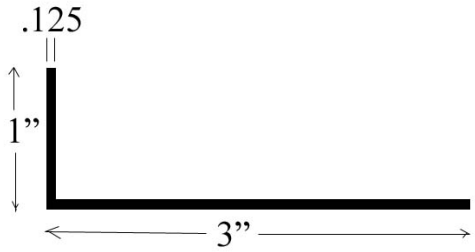

Part AA1/8X1.5X1.5X16- Aluminum Angle

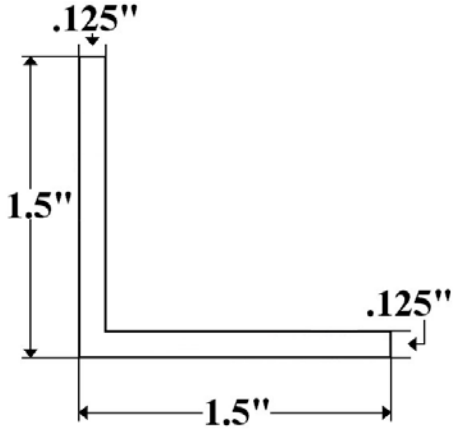

Part AA1/8X2X2X16- Aluminum Angle

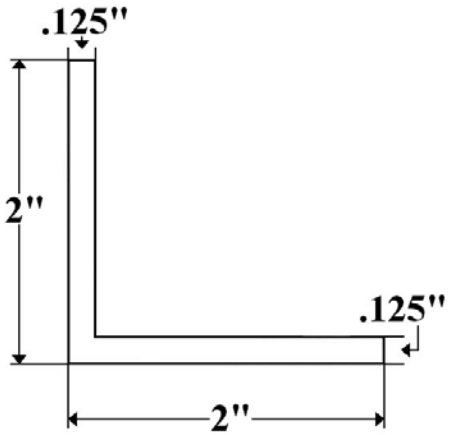

Part AA1/8X3X3X16- Aluminum Angle

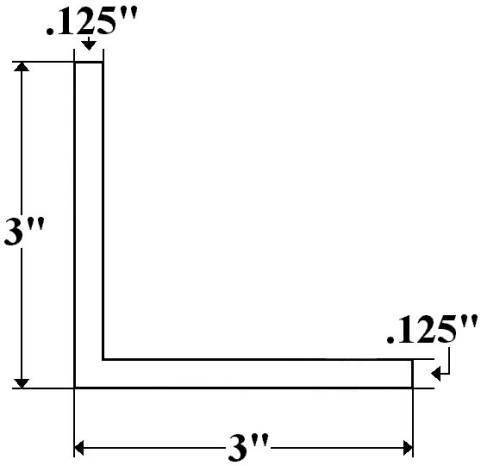

Part C-531 - Continental Truck Body Top Rail

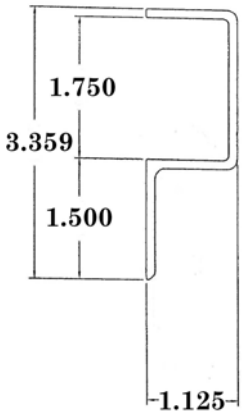

Part DEM2254- Door Edge Molding

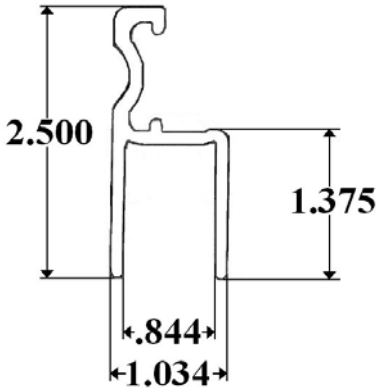

For 3/4" Plymetal Door

Interlock for Grumman Top Rail

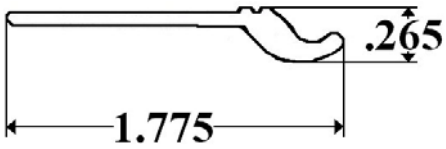

Use with 4002 Top Rail

Part QX111- Side Door Frame Universal

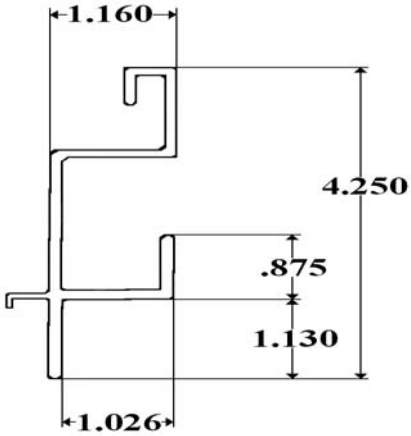

Part RR1000- Rub Rail Morgan
New Style

Uses Casting #6971

Part RR2120- Rub Rail

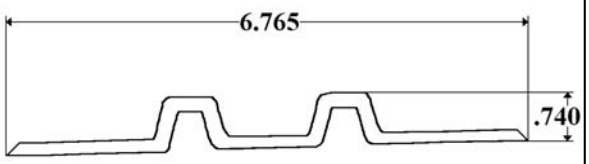

Part RR531- Rub Rail Morgan, US

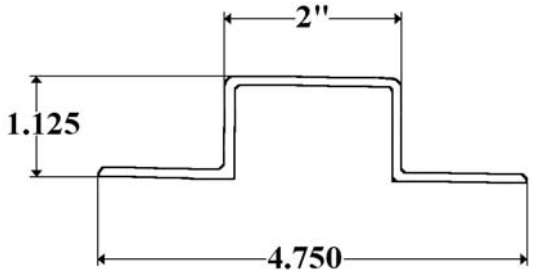

Uses Casting #531

Part RR619- Rub Rail UPS

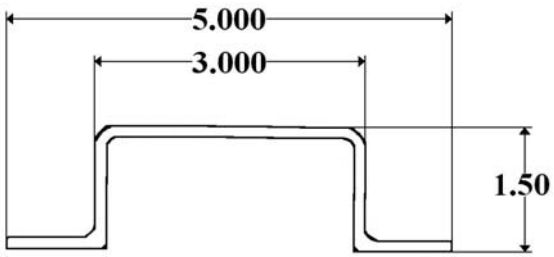

Uses Casting # 619

Part RR9004– Rub Rail

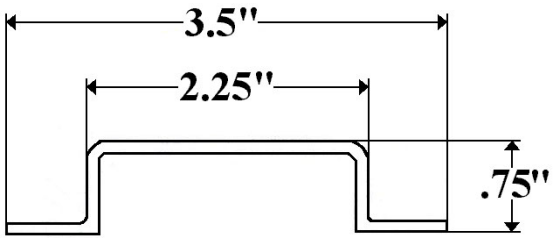

Uses Casting #9004

Part TRV1- Corner Post Babb *Old Style*/ Trail-R-Van

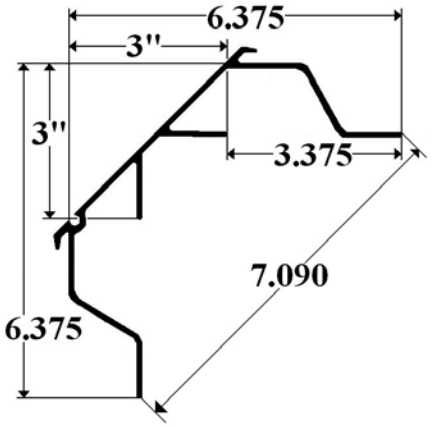

Part TRVBOT- Bottom Rail Babb, Trail-R-Van Delta QX

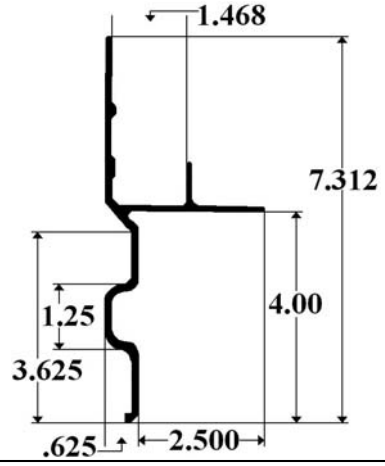

Part UR- Universal Rail Supreme- Lower of 2 PC Top Rail for Aluminum Body

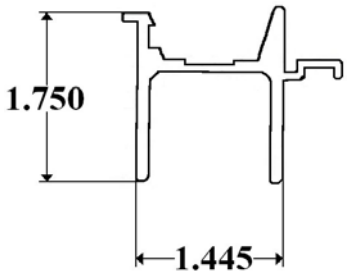

Rear Connector Aluminum Body, Side Door Frame Aluminum Body

Part C2259– Cross Member Clip

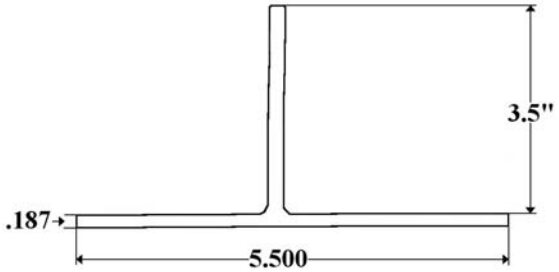

Use with Part #X2200

Part X2200- Cross Member Trailer & Reefer Container

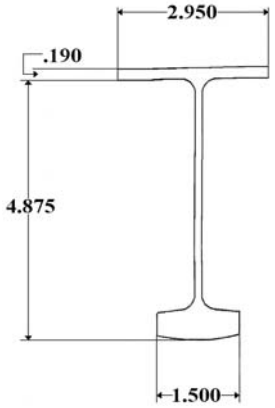

Uses Clip #C2259

Part C2201– Cross Member Clip

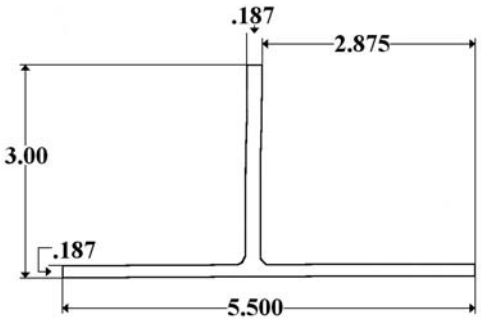

Use with Part #X2260

Part X2260- Cross Member Trailer & Reefer Container

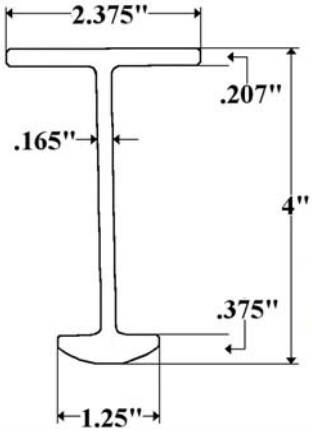

Uses Clip #C2201

WGA12/24 & 28- Wall-Guard Aluminum Scuff Liner
12.063" *High*, 24' & 28' *Long*

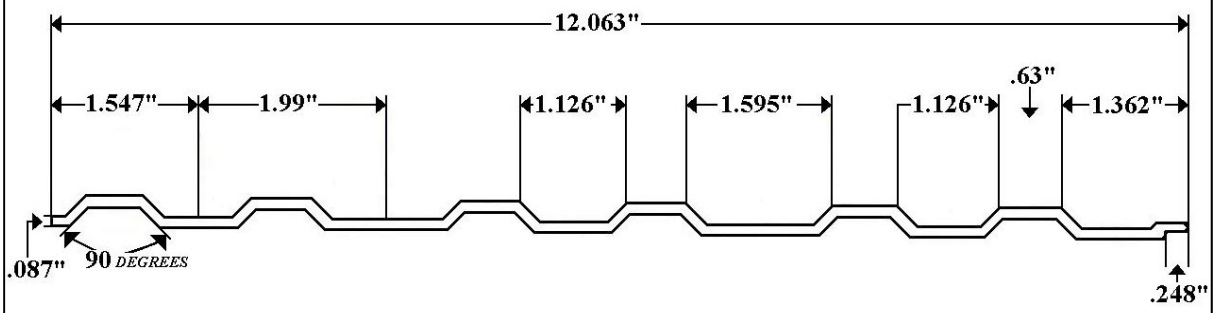

Radius Posts & Panels

Part 00054- Duralite Corner Post- Aluminum Body

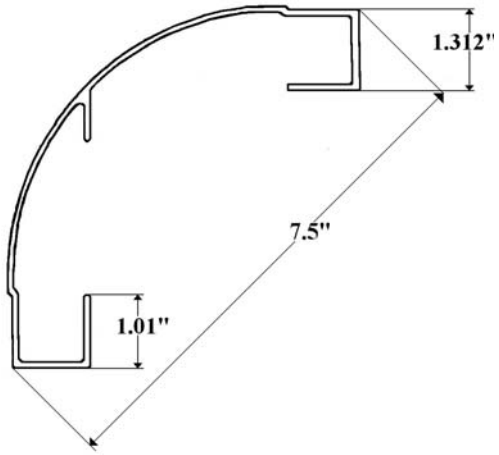

Part 00078– Roof Radius U.S. Truck, Jannell, A.M. Haire, Duralite &Others

M-Mill **W-White**

00078M 24” X 96”
00078W 24” X 96”

Part 1010- Corner Radius Morgan

M-Mill **P-Polished** **S-Stainless**

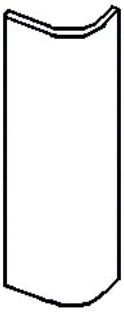

1010M 15.28 X 96”
1010M/104 15.28 X 104”
1010P 15.28 X 96”
1010P/104 15.28 X104”
1010S 15.28 X 96”
1010S/104 15.28 X104”

Part 1012- Roof Radius Morgan

M-Mill **P-Polished** **S-Stainless**
PY– Penske Yellow

1012M 19.28 X 80.88
1012M2 19.28 X 86.88
1012P 19.28 X 80.88
1012P2 19.28 X 86.88
1012S 19.28 X 80.88
1012S2 19.28 X 86.88
1012PY2 19.28 X 86.88

Part 1014- Corner Radius Morgan, Grumman

M-Mill

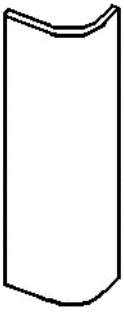

1014 16.687 X 96”
1014/102 16.687 X 102”

Used on Morgan Penske Bodies

Also used on Grumman With FP4100R&L Plastic Corner Caps

Part 1015M- Roof Radius Morgan Family Van *Mini*

Used with FP1050R&L Corner Caps

11-1/2 X 70-7/8 Mill *Punched 4" Centers*

Part 1016M– Parcel Del Van Morgan Corner Radius

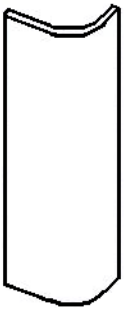

1016M 16.75 X 88"

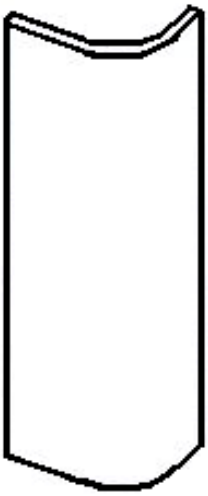

Supreme Corner Radius
M-Mill
S-Stainless (through 1998)
E-Extruded (1999 on)

2010E 12” X 103.5”

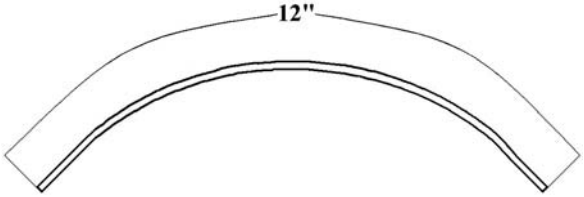

2010S 11-3/4” X 96” ***Punched 4” Centers***

2010S/108 11-3/4” X 108” ***Punched*** 4” Centers

Supreme Roof Radius *Punched 2” Centers*
M-Mill S-Stainless PY-Penske Yellow

2012M	**20-5/8” X 79-3/8”**	**For 96”**	**Wide Body**
2012M2	**20-5/8” X 85-3/8”**	**For 102”**	**Wide Body**
2012S	**20-5/8” X 79-3/8”**	**For 96”**	**Wide Body**
2012S2	**20-5/8” X 85-3/8”**	**For 102”**	**Wide Body**
2012PY	**20-5/8” X 79-3/8”**	**For 96”**	**Wide Body**
2012PY2	**20-5/8” X 85-3/8”**	**For 102”**	**Wide Body**

Utilimaster Roof Radius *Mitred*

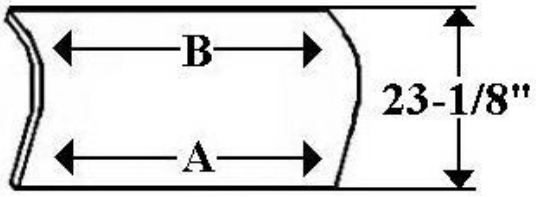

	A		B	
3012RY	80”	X	88-1/2	Ryder Yellow
3012M	84”	X	92-1/2	Mill
3012M2	90”	X	98-1/2	Mill

Part 334-2- Front Corner Post U.S. Truck

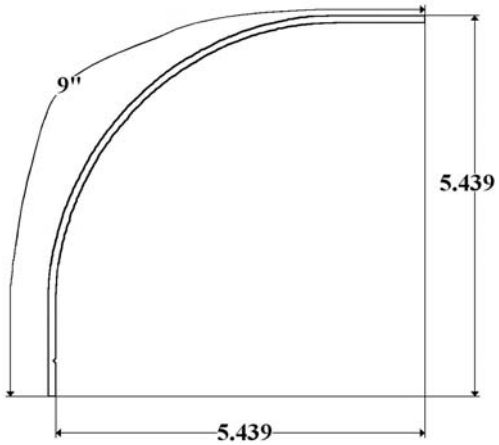

Also Used on Duralite FRP Body

Part 388-17- US Truck Body Stainless Steel Corner Radius Punched 5” Centers

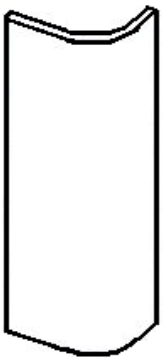

Part 38866- Morgan Corner Post

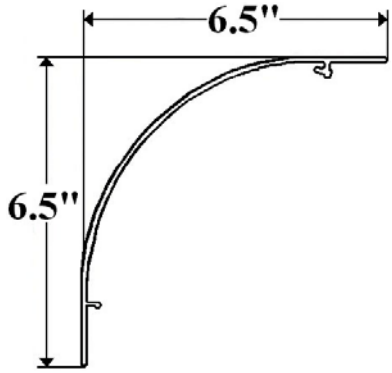

Part 3910E- Modern Wagon Corner Radius

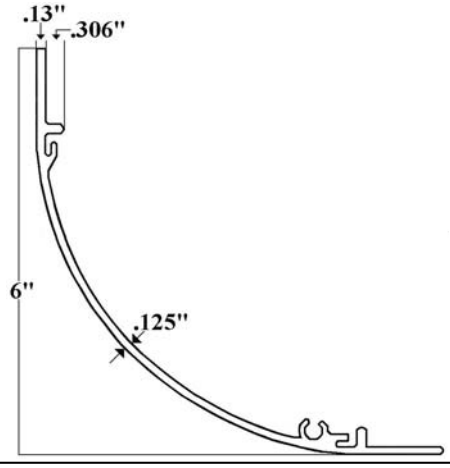

Part 3912W (White)- Roof Radius Duralite, Modern Wagon, & Marathon/Satellite/Metro 16” Radius

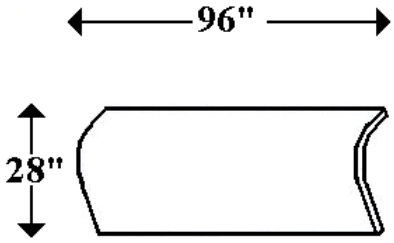

Part 4012/102– Grumman Roof Radius

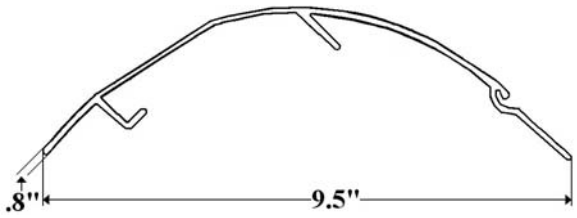

Used with FP4500R&L Corner Caps

Part 4012L- Grumman Roof Radius
Lower of 2 Pieces (Upper #4012U)

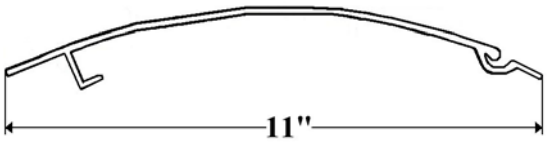

Used with FP4000R&L Corner Caps

Part 4012M (Mill),
4012PY (Penske Yellow)-
Grumman Roof Radius

Used with FP4100R&L Corner Caps

Part 4012U- Grumman Roof Radius
Upper of 2 Pieces (Lower #4012L)

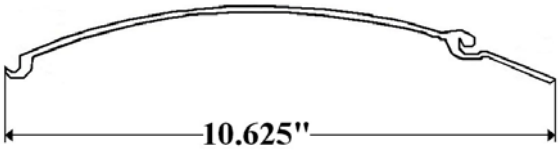

Used with FP4000R&L Corner Caps

Part 423-M, W– US Truck Body
Roof Radius

M-Mill **W-White**

Part 4030/103 (103”) & 4030/112 (112”)-
Corner Post
Grumman & Utilimaster

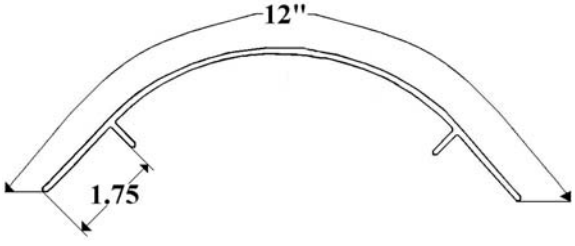

Part 5010E (97.37”) & 5010E/109 (109.37”)- Kidron Corner Radius Extruded

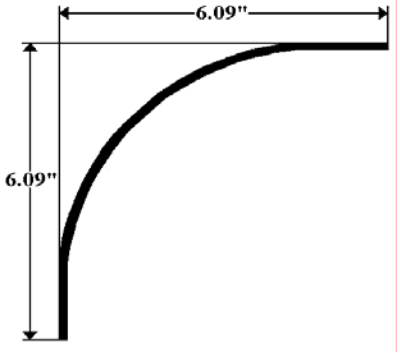

Dry Freight & Reefer

Part 5012E- Kidron Extruded Roof Radius, Reefer Body

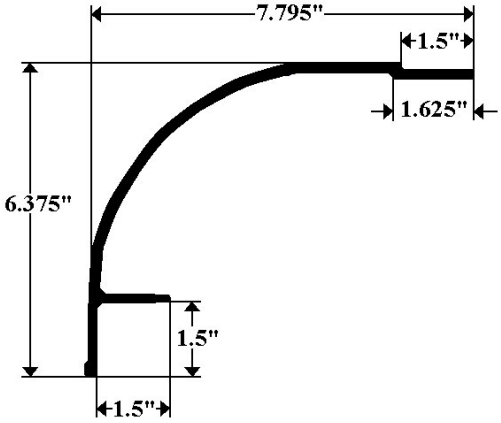

For 96” or 102” Body

Part 5012M (96” Wide) & M2 (102” Wide)– Kidron Roof Radius Dry Freight Mitered

Part 6010E– Mickey Front Corner Post

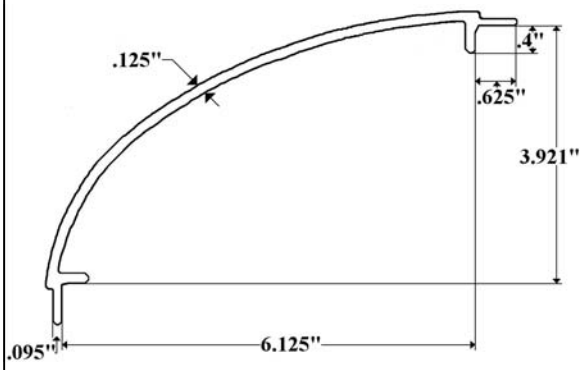

106”

Part 6012M- Mickey Roof Radius Fits bodies up to 102” wide

15-1/4” X 91”

Part 7010 & 7010P (Polished)
Lengths- 98-3/8” & 125-3/8”-
A.M. Haire Front Corner Post

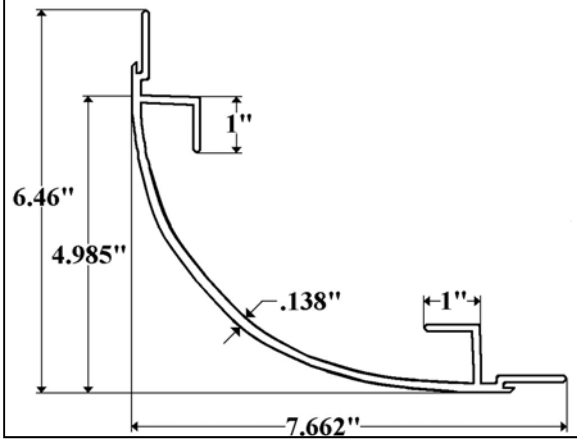

Part 7712S– ABC Stainless Roof Radius
Punched 4” Centers

16” X 89”

Part 8010E – American Commercial
Front Corner Post

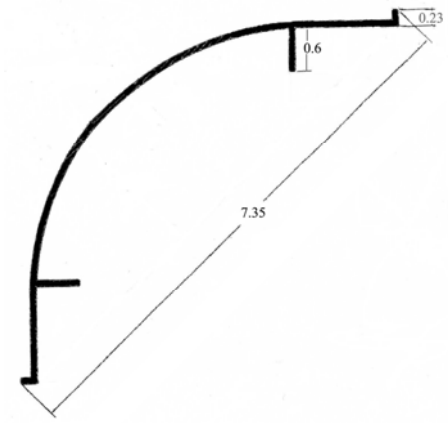

Part 9010/FRP- Babb Corner Post-
FRP Body

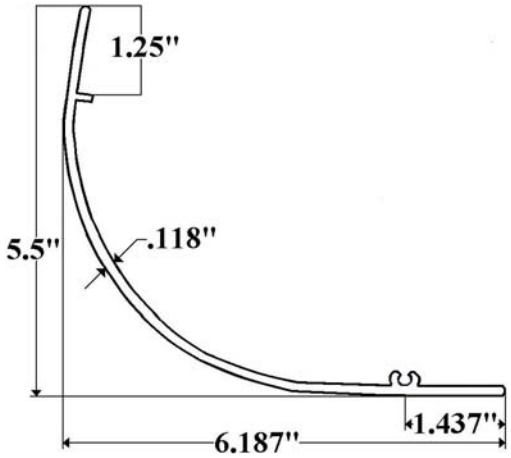

Part 9010E– Babb Corner Post
Aluminum Body

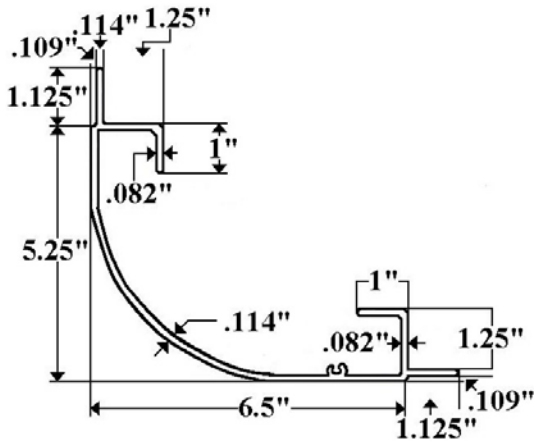

Part 9910E- Marathon/Satellite/Metro
Front Corner Post

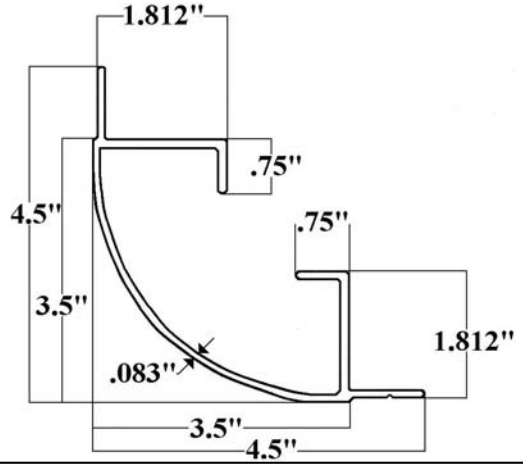

Part C-334- Aluminum Diamond Plate Corner Radius

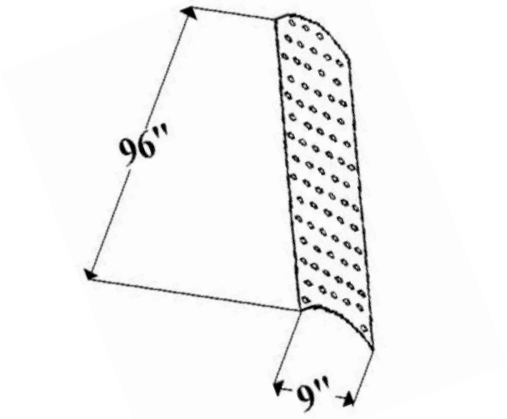

Continental & Others

Part DPRR2496– Aluminum Diamond Plate Roof Radius

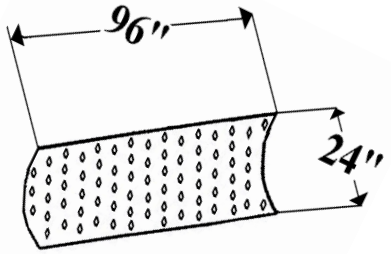

Used on Babb, American Commercial & Others

Part TRV1- Corner Post Babb *Old Style*/ Trail-R-Van

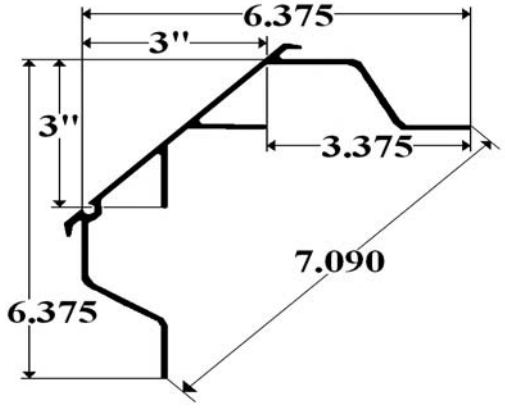

Part VB801 — Grumman V-Body Front Corner Post

OBSOLETE: Use 4030/103

Steel Parts

Part 00010 (97”) & 00010/108 (108”)– Steel Slat Spacer

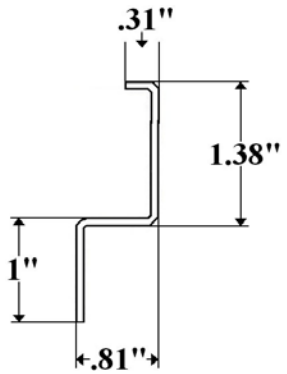

Part 00050 - Kidron FRP Base & Slat Spacer 105.5”

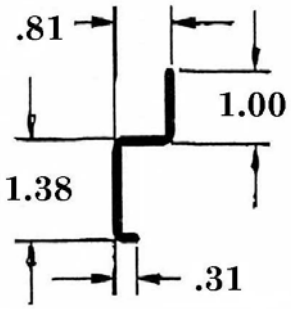

Part 10250 (96”)- Starter Bow Duralite

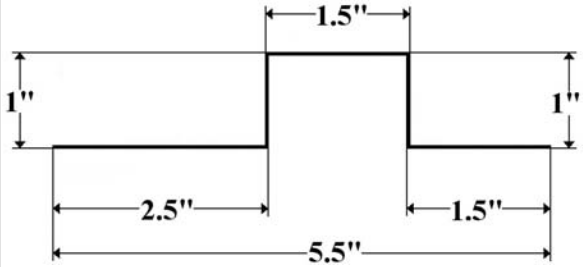

Part 104-1 (108”)- U.S. Truck 3-1/2” Z Mounting Section

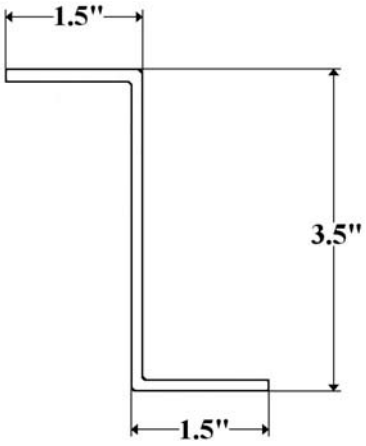

Part 1050/92 (92”) & 98 (98”)-
1-3/8” Morgan Starter Bow

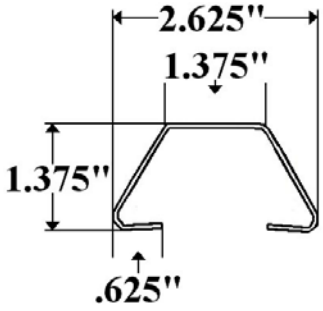

Reverse Arch

Part 1050/92M (92”) & 98M (98”)-
1-3/8” Morgan Starter Bow with Tab

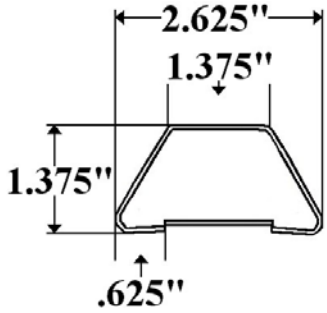

Reverse Arch

Part 1050/92-1 (92”) & 98-1 (98”)-
1” Morgan Starter Bow

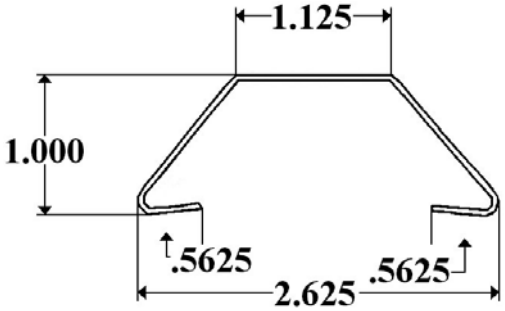

Reverse Arch

Part 1050/92-1M (92”) & 98-1M (98”)-
1” Morgan Starter Bow with Tab

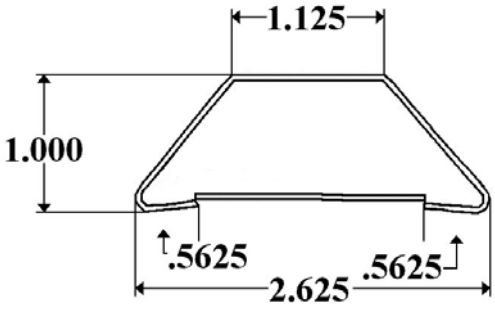

Reverse Arch

Part 107-1 (108”)- U.S. Truck
5-1/2” Z Mounting Section

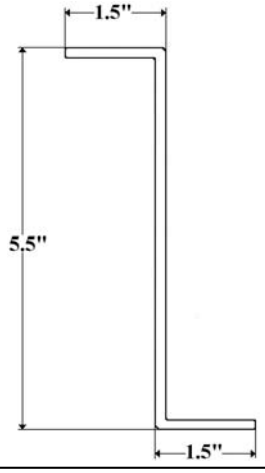

Part 203-1 (96”)- U.S. Rear Header

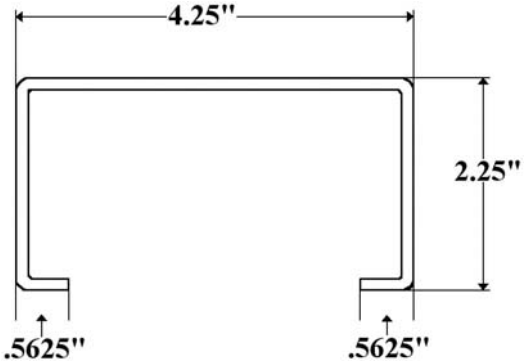

Part 2050/91 (91”) & 97 (97”)- Starter Bow Supreme

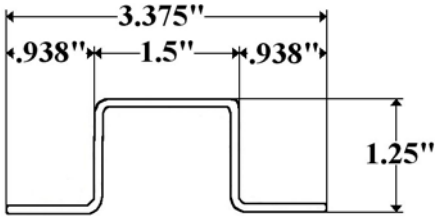

Part 208-1- U.S. Rear Corner Post Swing Door

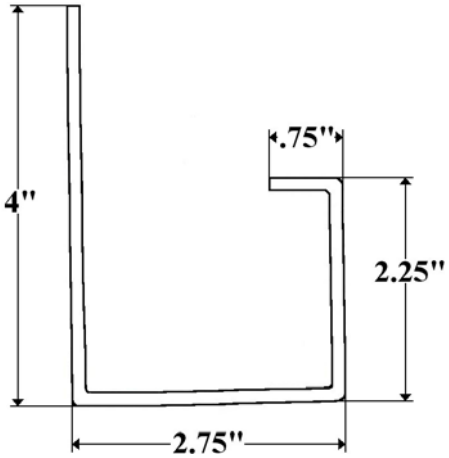

Part 232-2D (96”), 2E (108”), & 232-NH (108”) *No Holes for FRP Body* Supreme, AC, Delta, Vanco Steel Z Post

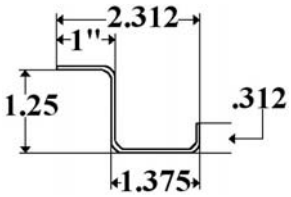

Punched on 3” Centers

Part 280-1- U.S. Rear Corner Post- Roll-Up Door

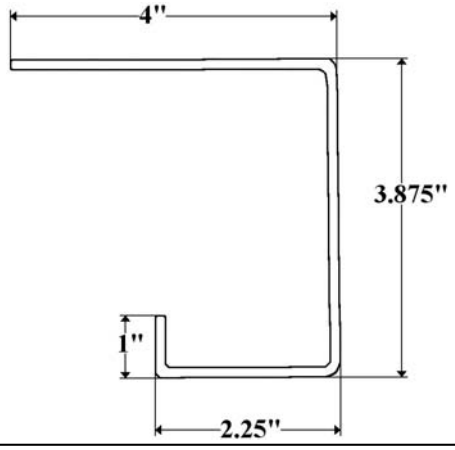

Part 3050/92.5 (92.5”) & 98.5 (98.5”)- Starter Bow Utilimaster

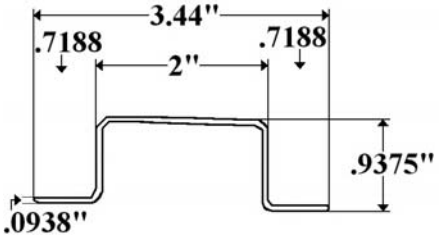

Part 321-1C (88.5”), 1D (92.5”) & 321-1E (98.5”)– Utilimaster, A.M. Haire Roof Bow

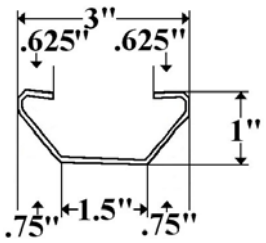

Part 330-2D (96”)- Utilimaster Steel Z-Post Aluminum Body *1998*

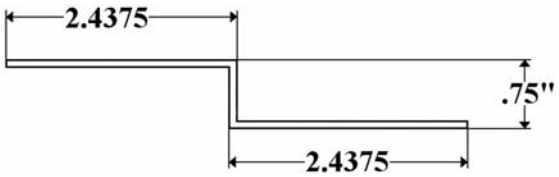

Part 390-1D (93”) & 1E (99”)- Modern Wagon Roof Bow

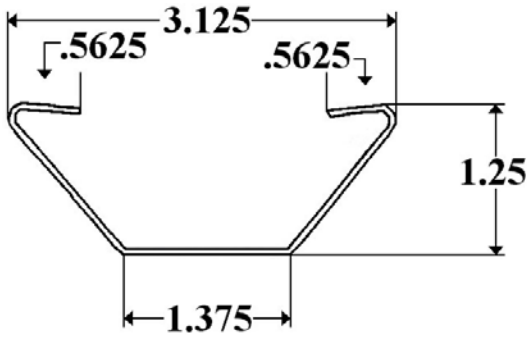

Part 419-1D (92.5) & 419-1E (98.5)- Roof Bow Grumman

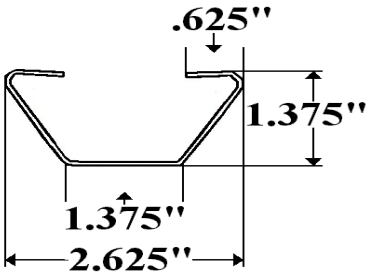

Part 420-1D (92”) & 1E (98”)- 1” Roof Bow Morgan

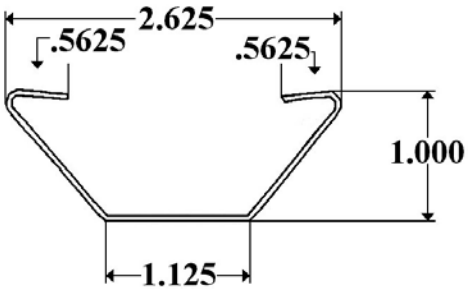

Part 421-1D (92”) & 1E (98”)- 1-3/8” Roof Bow Morgan, U.S., Babb, Mickey, Trail-R-Van

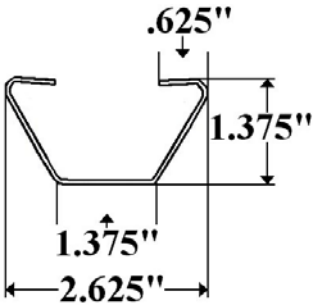

Part 427-1 (98”)- Starter Bow U.S. Truck, Jannell, & Mickey

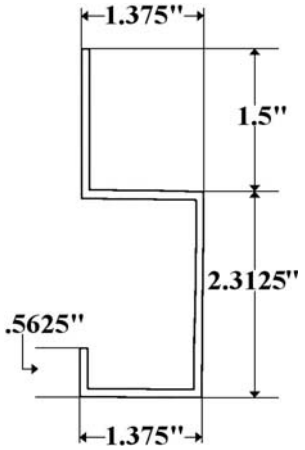

Part 500-1D - Kidron Dry Freight Roof Bow 9” Radius New Style 91”

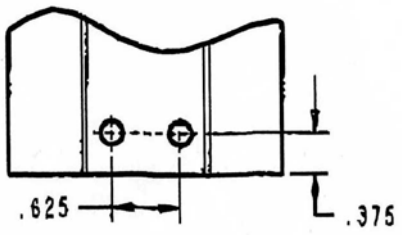

Part 500-1E - Kidron Dry Freight Roof Bow 9” Radius New Style 97”

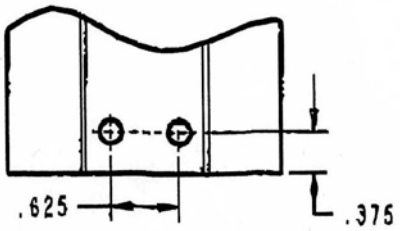

Part 521-1D (91”) & 521-1E (97”)- Roof Bow Supreme

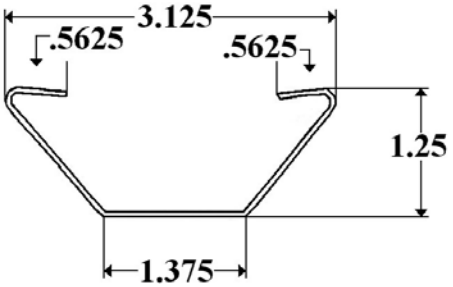

Old Style — Obsolete — see adjacent

Part 521-1D (91”) & 521-1E (97”)- Roof Bow Supreme New Style

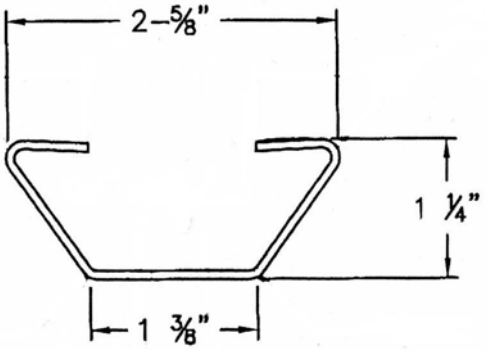

Part 7050/98-
1” Starter Bow A.M. Haire

Fits up to 102” Wide Bodies

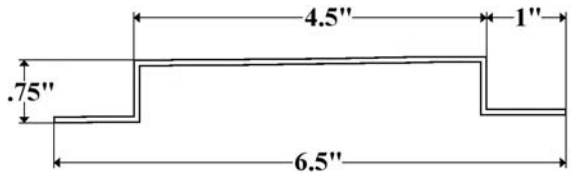

14 Ga. Galvanized

Part 732-2D (96”), 2E (108”) &
732-NH (No Holes) for FRP Bodies-
Utilimaster, Grumman, A.M. Haire
Steel Z-Post

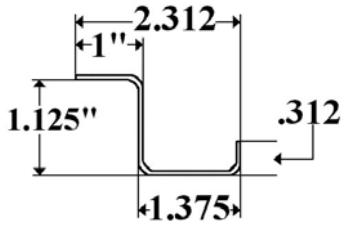

Punched 3” Centers

7 GAUGE STEEL LIGHT MODULES

2 LIGHT MODULES #781-1 NOT PAINTED- NO LIGHTS
24” HIGH X 3-3/4” WIDE X 3-1/2” DEEP

3 LIGHT MODULES #782-1 NOT PAINTED- NO LIGHTS.
29” HIGH X 3-3/4” WIDE X 3-1/2” DEEP

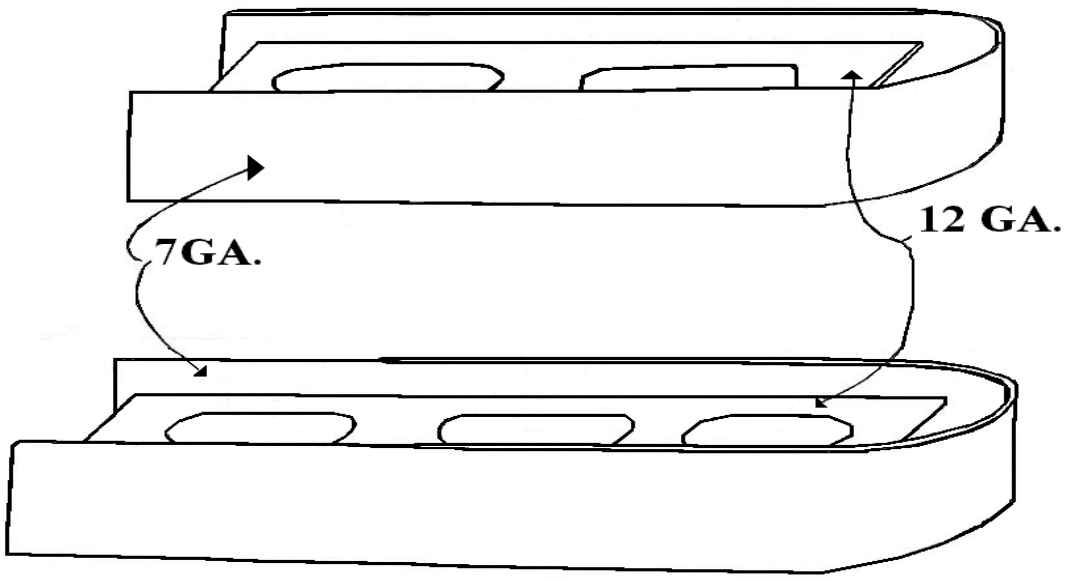

Part 820-1D (93-1/2”) &1E (99-1/2”)- Roof Bow American Commercial

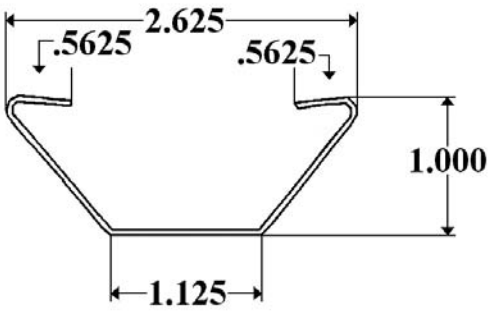

Part 932-2E– Marathon Steel Z Post 1-13/16” X 107-7/8” *Punched 3” Centers*

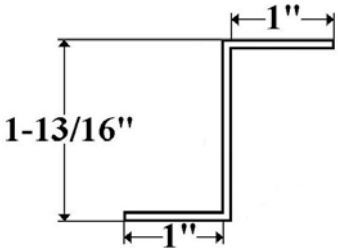

Part CGS- Corner Gusset, Supreme, Utilimaster, & Others 1/4 H.D. Steel

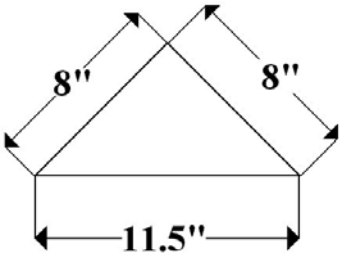

Part CM3C102- Steel Cross Member

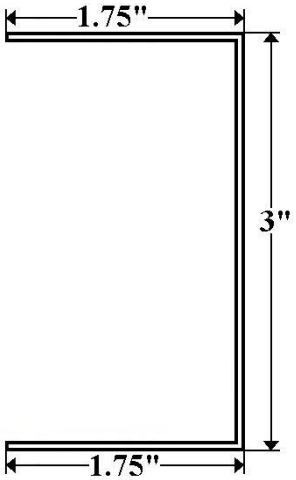

DLP108A (A Slot) & DLP108E (E Slot)
108” Double Logistic Wall Post

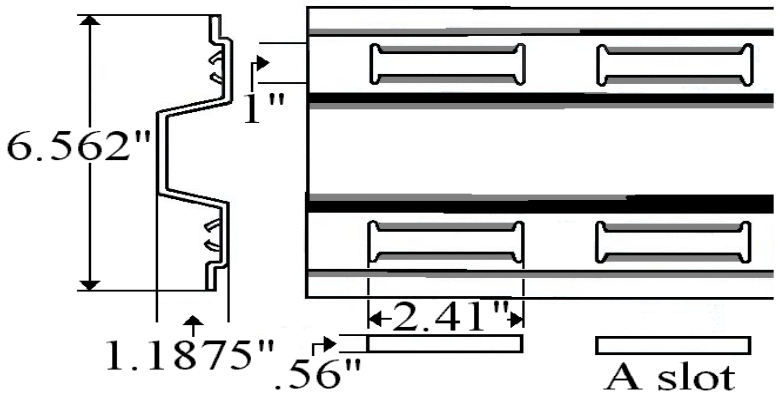

E Track Painted
Series-E Track 10 ft.

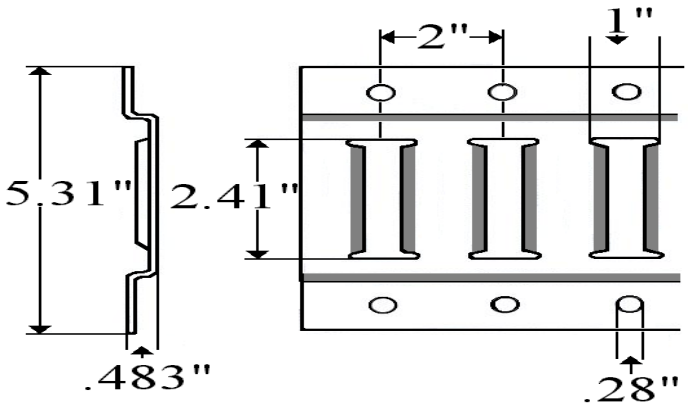

Part GR1- Grumman Rear Header

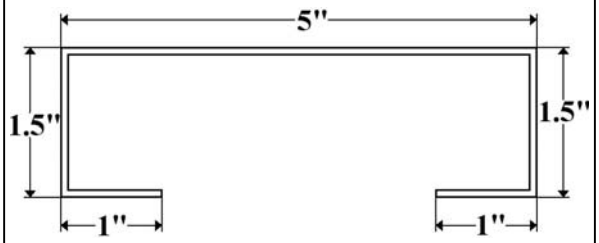

Part GR2- New Grumman & Utilimaster Rear Header

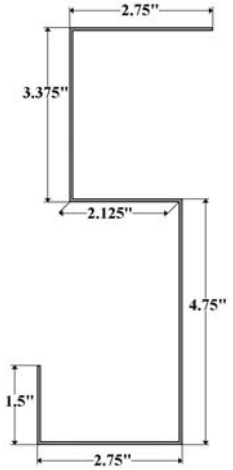

Part GR3 (108”)- Grumman Rear Corner Post

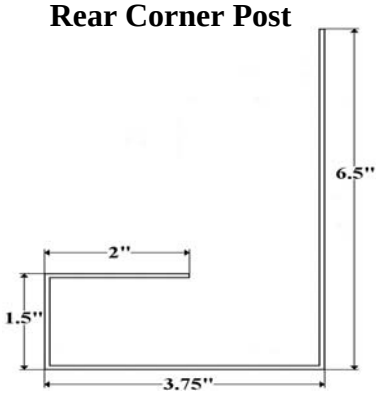

Morgan Parcel Delivery Van Rear Corner Post

Part GR3-1 (108”)- Grumman Rear Corner Post

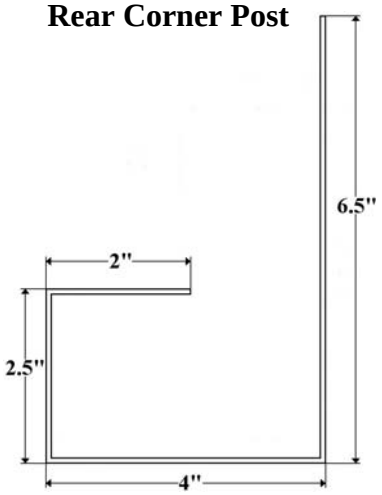

Part KI2– Kidron Rear Rear Rain Gutter

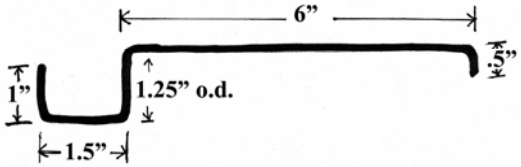

Part MO1- Morgan Rear Header

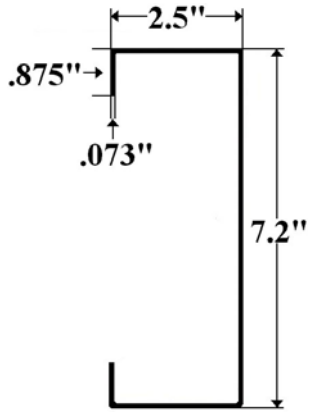

Also Available in Stainless MO1S

Part MO1SR- Morgan Reefer Rear Header 96” Stainless Steel

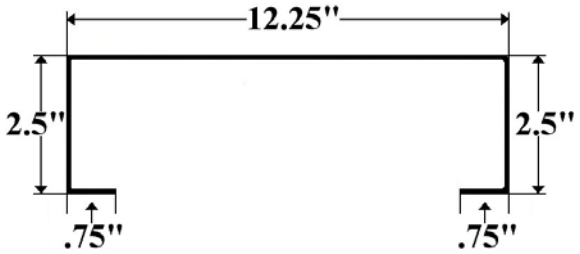

Also Available in HR Steel MO1R

Part MO2 (96”) & MO2/102 (102”)- Morgan Rear Rain Gutter

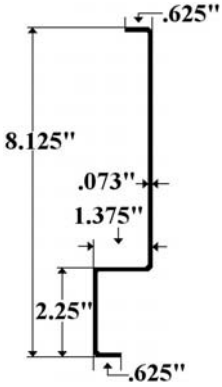

Also Available in Stainless MO2S & MO2S/102

Part MO3/108 (108”)- Morgan Rear Corner Post

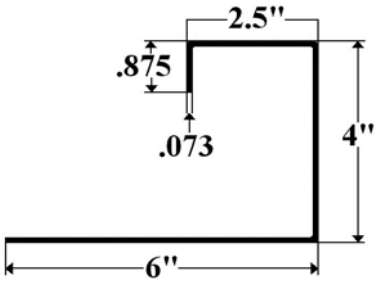

Also Available in Stainless MO3S/108

Part MO3/INSERT—Reinforcement Inside Morgan Rear Corner Post 108”

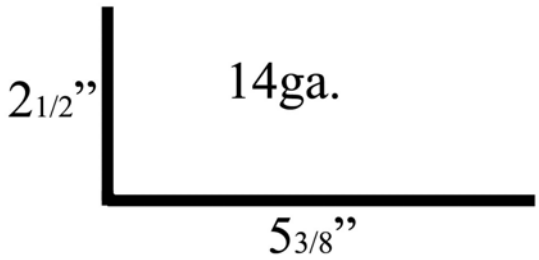

Part MO3-1 (96”)- Morgan Rear Corner Post Offset to Outside

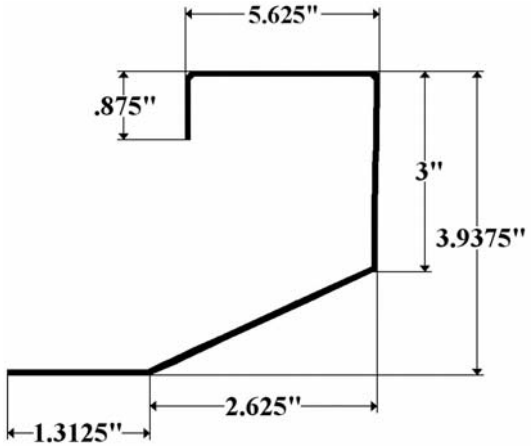

Part MO5S (108”)- Morgan Stainless Steel Reefer Rear Corner Post

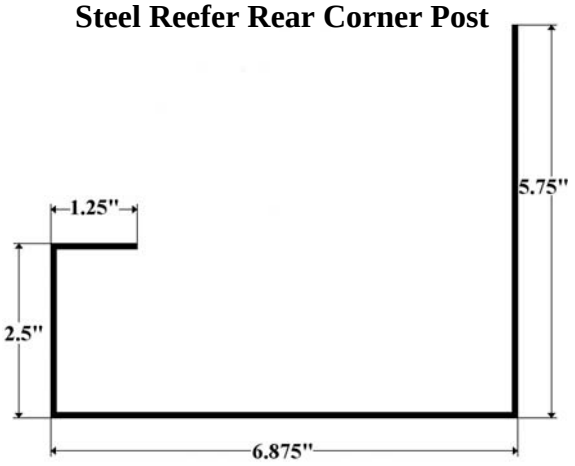

Also Available in HR Steel MO5

Part S1022 (107”)- Steel Hat Post
Morgan, U.S., Mickey

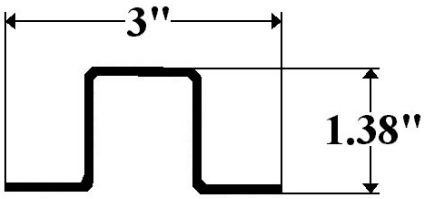

Punched 2” Centers

Part S2022– Steel Hat Post

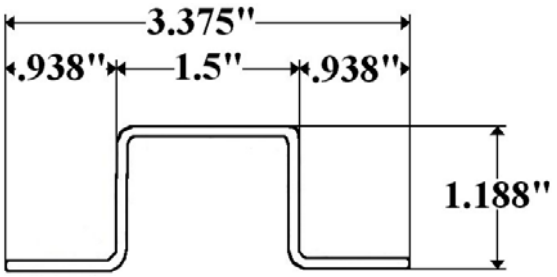

Supreme Reefer Roof Bow

Part S3022- Steel Hat Post & Roof Bow

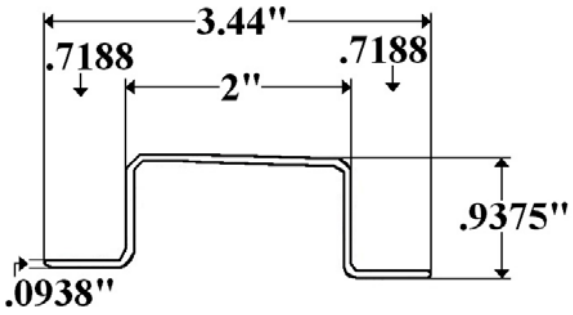

Kidron Roof Bow

Part S332-2D (97”) & 2E (108”)-
Steel Z Post, Morgan, U.S. Truck,
Mickey

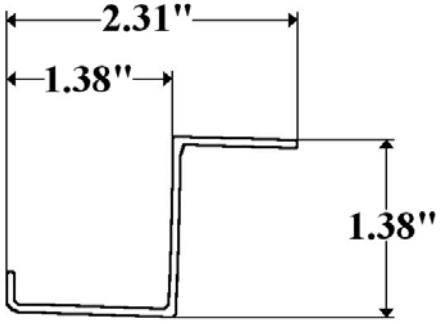

Punched 2” Centers

Part S5022-Front Vertical Connector
Grumman Aluminum Body

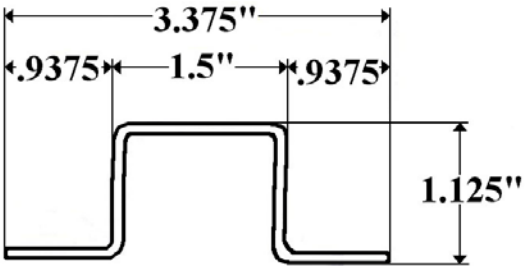

ABC Post & Roof Bow

Part S9922- Marathon/Satellite/Metro
Steel Hat Roof Bow
1-3/4” X 98-7/8”

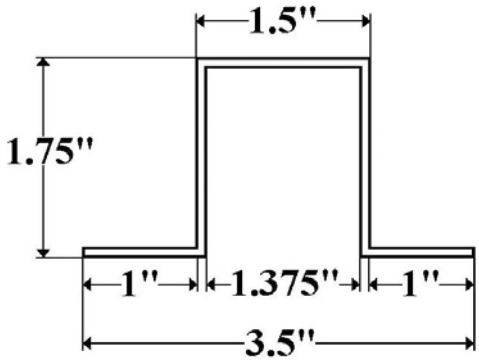

“ADJUSTABLE” Rear Step Bumper

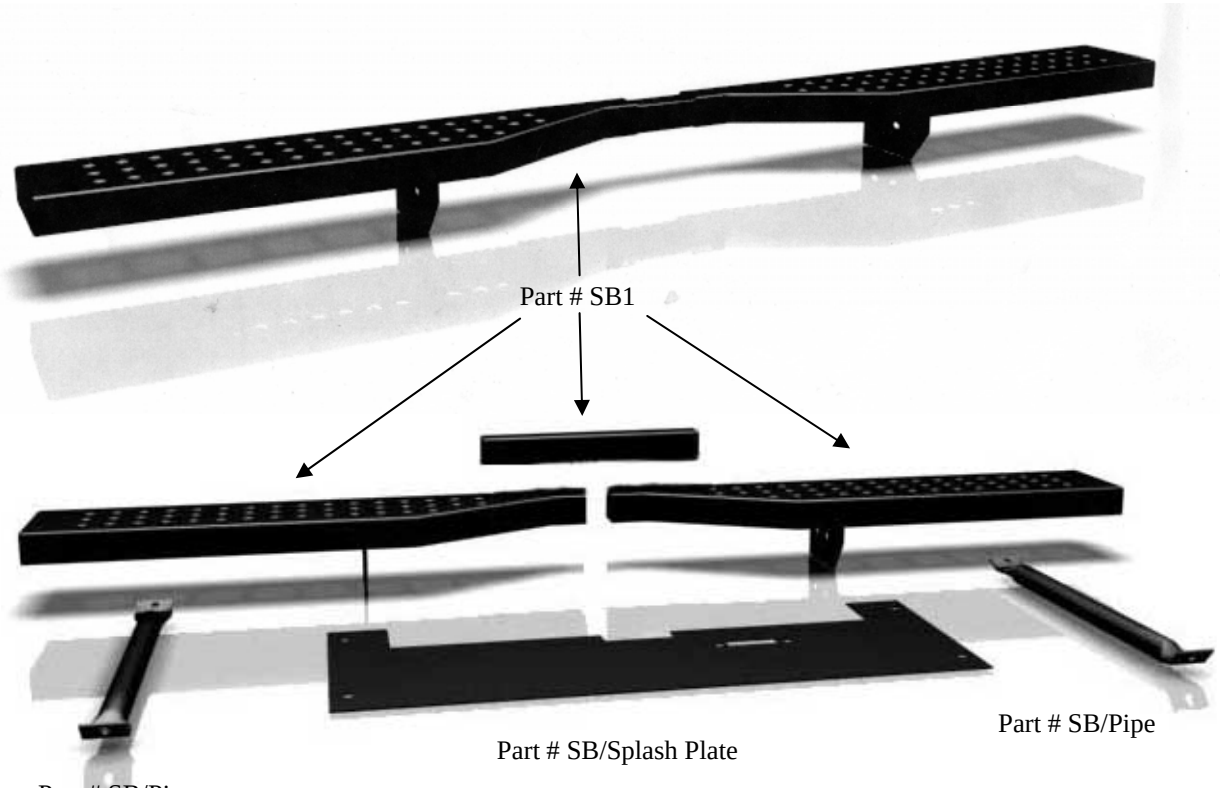

Patent Pending

Part SU1– Supreme Rear Header

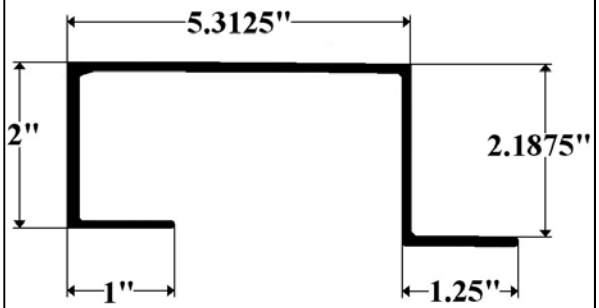

Part SU2- Supreme Rear Header

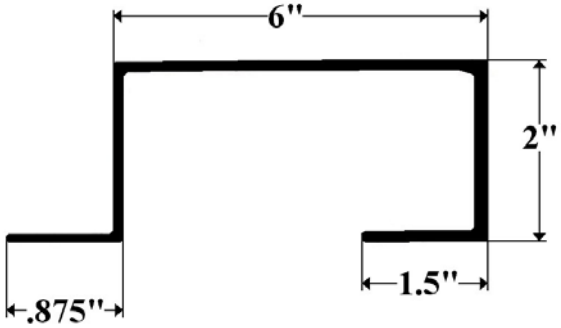

Part SU3/108 (108”)- Supreme Rear Corner Post

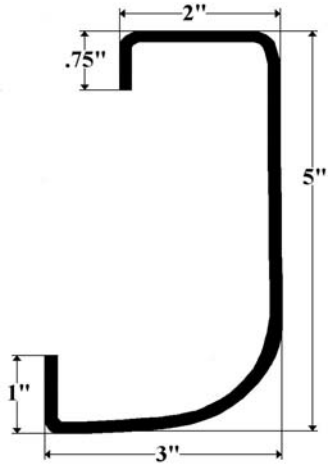

Part SU3-VAI (96”)- Supreme Rear Corner Post Insert Aluminum Body

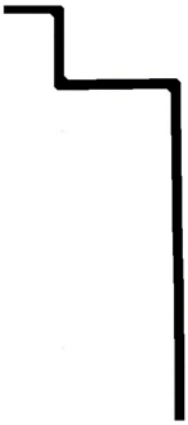

Part SU3-VFI (96”)- Supreme Rear Corner Post Insert FRP Body

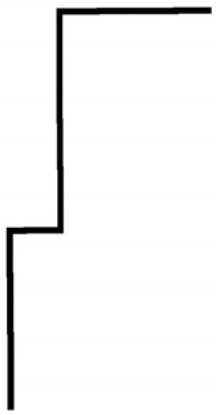

Part SU4 - Supreme Mini Rear Corner Post Steel

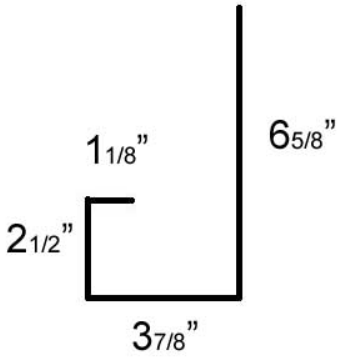

OEM # 015520938

Part UT1- Utilimaster Rear Header

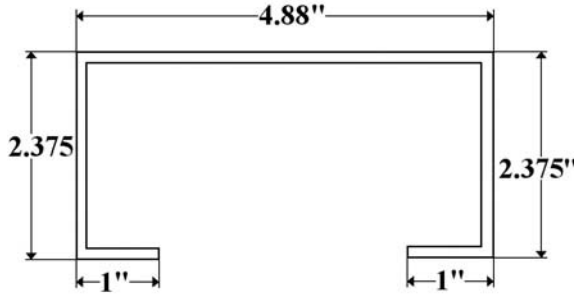

Part UT3 (108")- Utilimaster Rear Corner Post

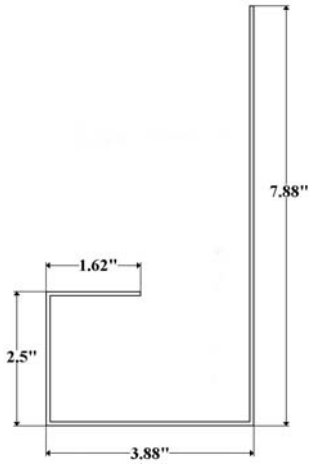

WG12- Wall-Guard Steel Scuff Liner
12" *High*, 24' & 28' *Long*

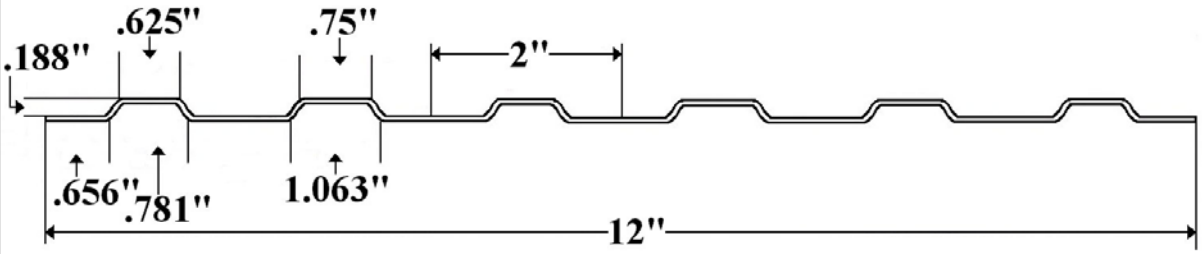

Fiberglass Caps

Fiberglass Cap #066450– Morgan White Reefer Dormer

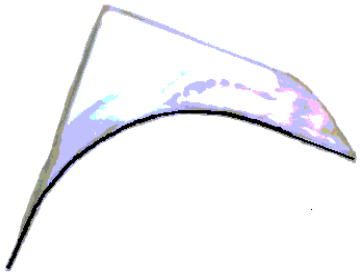

Fits 96” or 102” Wide Body

Fiberglass Cap #066586- Morgan 96” Wide Body Silver
Penske Yellow 066583, White 066586W

Fiberglass Cap #066592- Morgan 92” Wide Body
White (Avis) No Hole for Marker Light

Fiberglass Cap #066592P- Morgan 92” Wide Body
Penske Yellow No Hole for Marker Light

Fiberglass Cap #066593- Morgan 96” Wide Body
White (Avis) No Hole for Marker Light

Fiberglass Cap #139064-Supreme 96” Wide Body
White Standard

Fiberglass Cap #139064P– Supreme 96” Wide Body
Penske Yellow

Fiberglass Cap #139115– Supreme 79” Wide Body
Silver Ryder 139115W White

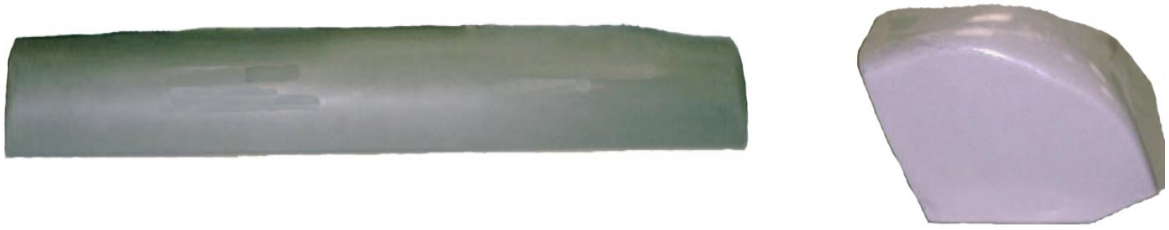

Fiberglass Cap #139307– Supreme White Reefer Dormer

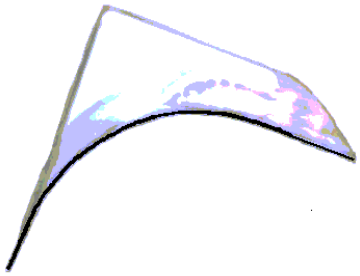

Fits 96” or 102” Wide Body

Fiberglass Cap #139830– Supreme 96” Wide Body
Silver Ryder and Budget used Through 1998

Fiberglass Cap #139834-Supreme 96”Wide Body
Silver Ryder and Ryder from 1999

Fiberglass Cap #139836- Supreme 102” Wide Body
Silver Budget

Fiberglass Cap #139840– Supreme 96” Wide Body Silver

New for 2002 Ryder & Budget

Fiberglass Cap #139841– 2004 Supreme 10’ Body

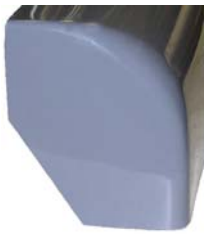

Fiberglass Cap #1900937- Utilimaster 96” Wide Body
Penske Yellow

Fiberglass Cap #20510266- Utilimaster 96” Wide Body
Silver Ryder and Budget

Fiberglass Cap #20510912- Utilimaster 102” Wide Body
Silver Ryder and Budget

Fiberglass Cap #441-11- U.S. Truck Body 94” Wide Body
Ryder Yellow

Truck Tape- 4” X 25’- Super Strong. Use to Seal Seam Between Roof and Fiberglass Nose Caps

Roll-Up Doors & Parts

Todco ¾ Dry Freight Door

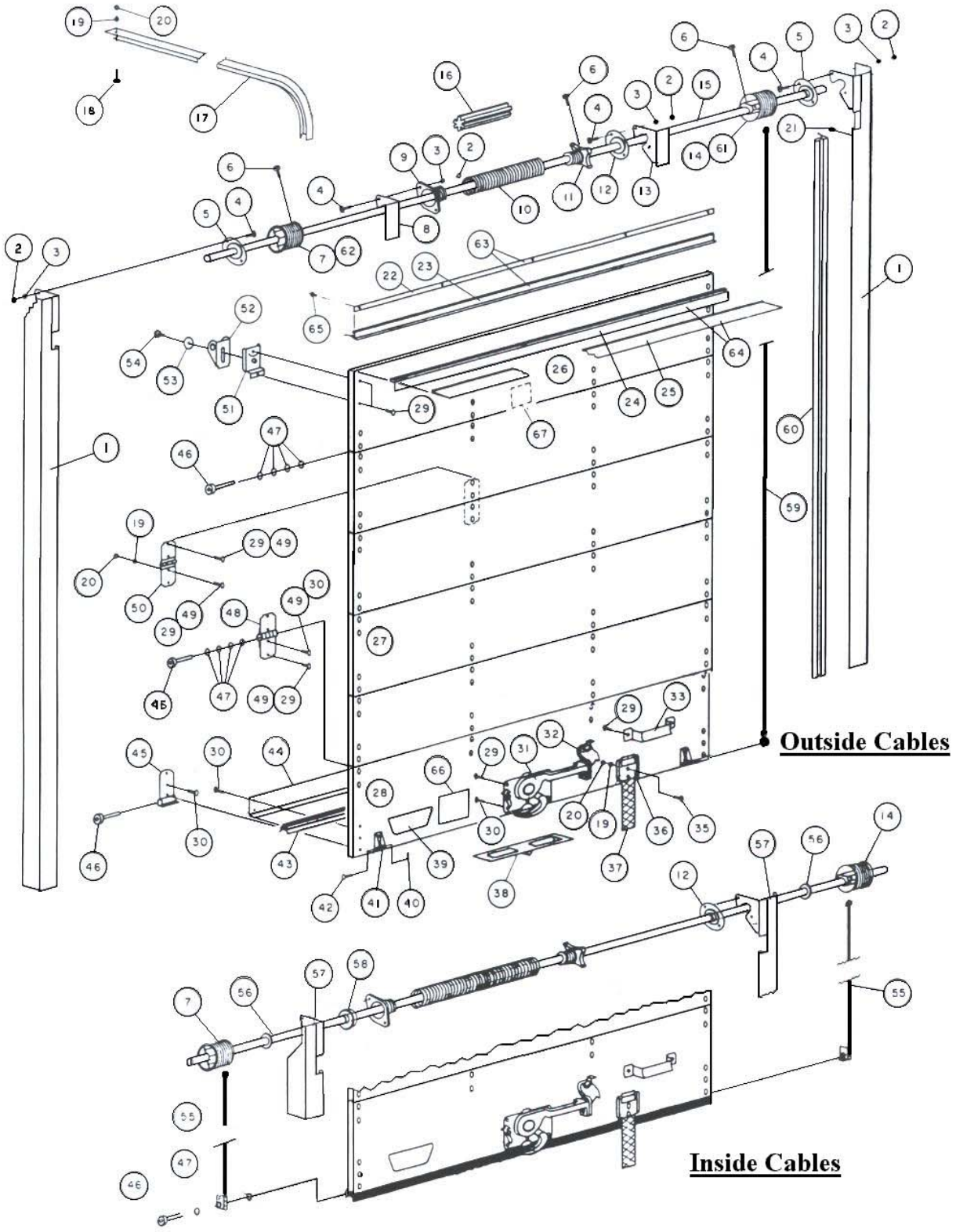

ITEM	PART NO.	Description
1	49019-1	Vertical Track Assembly-LH
	49019-2	Vertical Track Assembly-RH
2	80352-518	Hex Nut- 5/16” NC
3	80322-319	Lockwasher- 5/16”
4	89186-3	Hex Head Bolt-5/16”X 7/8”
5	51038	Bearing Assembly
6	80300-2414	Hex Head Set Screw-3/8” X 7/8”
7	59129-2	Cable Drum RH (Roadside) – to 105”Door Height
8	51036-2	Spring Anchor Bracket
9	51043	Spring Anchor Plug-1-3/4” I.D. Spring
	59024	Spring Anchor Plug- 2-1/2” I.D. Spring
10	51042	Spring- 1-3/4” I.D.
	59031	Spring- 2-1/2” I.D.
11	59158	Spring Winding Plug- 1-3/4” I.D. Spring
	59159	Spring Winding Plug- 2-1/2” I.D. Spring
12	59083	Bearing Assembly- Support Bracket
13	51036-1	Support Bracket-LH (Curbside)
14	59129-1	Cable Drum-LH (Curbside)
15	59290	Counterbalance Shaft
16	59092	Filler Plug- 2-1/2” I.D. Spring
17	49702-1	Horizontal Track- LH (Roadside)
	49702-2	Horizontal Track- RH (Roadside)
18	80105-414	Hex Head Bolt- ¼” NC X 1-3/4”
19	80322-255	Lockwasher- ¼”
20	80352-420	Hex Nut-1/4” NC
21	89100-1	Drive Rivet- 3/16” Dia X 9/32 Lg
22	61403	Retainer- Head Seal (Header Mounted)
23	61402	Head Seal (Header Mounted)
24	69790	Retainer- Head Seal (Panel Mounted)
25	69718	Head Seal (Panel Mounted)
26	29013	Top Panel- Plastic- No Hardware
	29017	Top Panel-Aluminum Covered- No Hardware
27	29014	Intermediate Panel- Plastic- No Hardware
	29018	Intermediate Panel- Aluminum Covered- No Hardware
28	29016	Bottom Panel- Plastic
	29020	Bottom Panel- Aluminum Covered
29	89210-0032	Rivet- 1”
30	89210-0036	Rivet- 1-1/8”
31	69517	Maximum Security Lock Assembly- Standard
	70223	Maximum Security Lock Assembly- Offset Lever Arm
32	69725	Keeper Assembly
33	61401	Lift Handle

35	89210-0044	Rivet- 1-3/8”
36	69832	Pull Strap Retainer
37	80844-1216	Pull Strap- 12” Looped (Standard)
38	70093	Catch Box
39	69793	Name Plate
40	80401-316	Cotter Pin- 3/32” Diameter
41	61204	Cable Anchor Bracket
42	61026	Cable Anchor Pin
43	80840	Bottom Seal
44	61191	Bottom Angle
45	61352	Bottom Fixture
46	61174	Roller
47	80020	Spacer Washer- Roller
48	69035	End Hinge Assembly
49	80015-0040	Step Bolt- ¼” NC X 1-1/4”
50	61196	Center Hinge Assembly
51	69432	Base- Adjustable Top Fixture
52	69431	Slide- Adjustable Top Fixture
53	80302-2436	Flatwasher- 3/8”
54	89049	E-Lok Bolt 3/8” NC
55	51079-1	Cable Assembly- LH (Curbside)
	51079-2	Cable Assembly-RH (Curbside)
56	80023	Spacer Washer- Cable Drum
57	49007-1	Vertical Track Assembly- LH (Curbside)
	49007-2	Vertical Track Assembly- RH (Curbside)
58	80701-2	Bearing
59	51044	Cable Assembly- 110” Lg to 100” Door Height
	59004	Cable Assembly- 115” Lg – 100” to 105” Door Height
	59003	Cable Assembly- 130” Lg – 105” to 120” Door Height
60	61390	Side Seal- Pair
61	59157-3	Cable Drum- LH (Curbside)- 105”- 120” Door Height
62	59157-4	Cable Drum- RH (Curbside)- 105” to 120” Door Height
63	69770	Head Seal Assembly (Header Mounted)
64	70001	Head Seal Assembly
65	89100-2	Drive Rivet- 3/16” Dia. X 15/32” Lg
66	70318	Warning Sticker- Safety Notice
67	70319	Warning Sticker- Counterbalance

Part 49948– Horizontal Track Clip

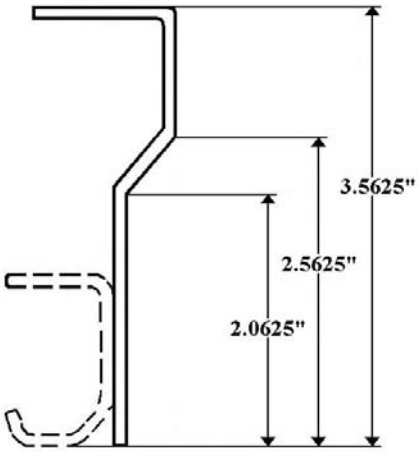

Part 61174- Standard 1” Steel Roller &
Part 69162- Sealed 1” Steel Roller

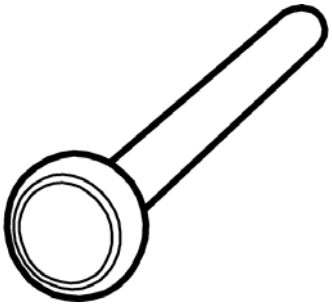

Part 61196- Standard Center Hinge

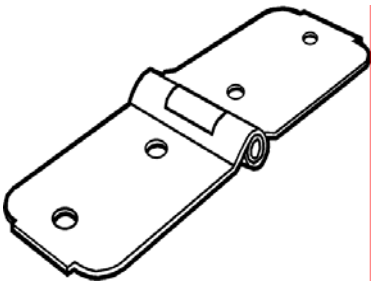

Part 69035- Standard End Hinge

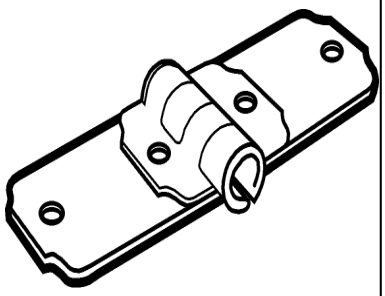

Part 70311- Removable End Hinge

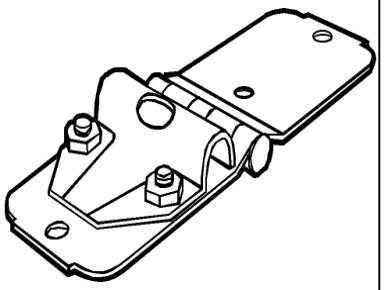

Part 61352- 3/4” Door Bottom Fixture

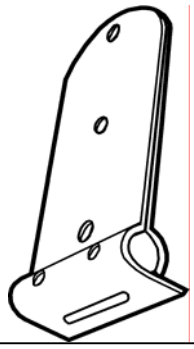

Part 69571- Standard Max. Security Lock &
Part 69572- Secondary Keeper

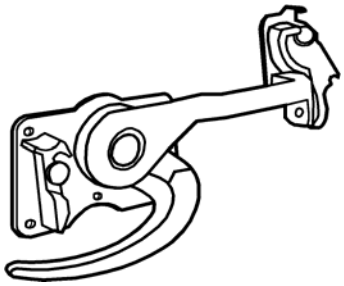

Part 61401- Lift Handle

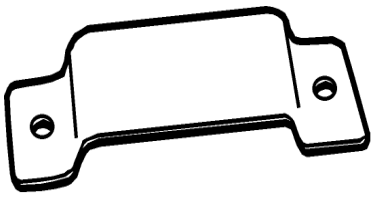

Part 51038- Bearing Assembly

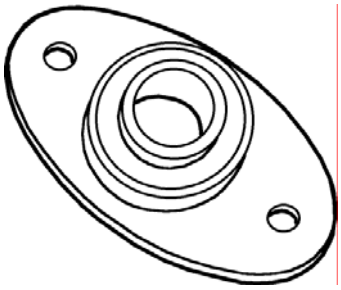

Part 69433- Adj. Top Hinge Complete

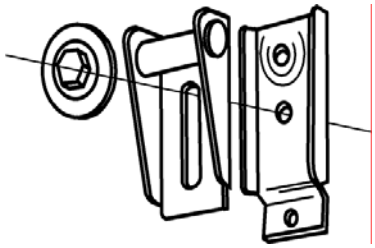

Part 61390- Rubber Slide Seal

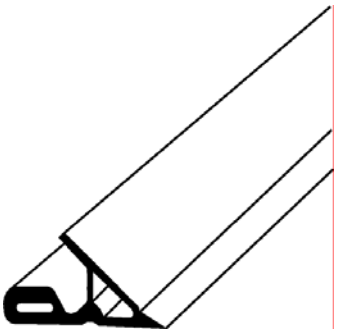

Part 59129-1 (Curb) & -2 (Road)- Standard Cable Drum &
Part 59157- Extended Cable Drum

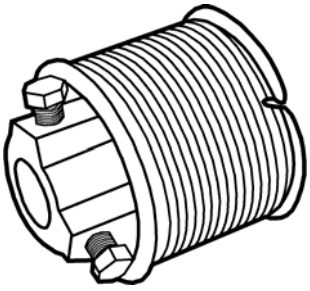

Part 3900-1012– Spray Lube

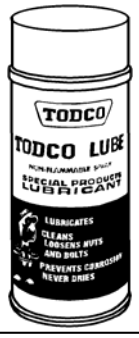

Whiting Premium- ¾” Dry Freight Door Plastic or Aluminum Clad

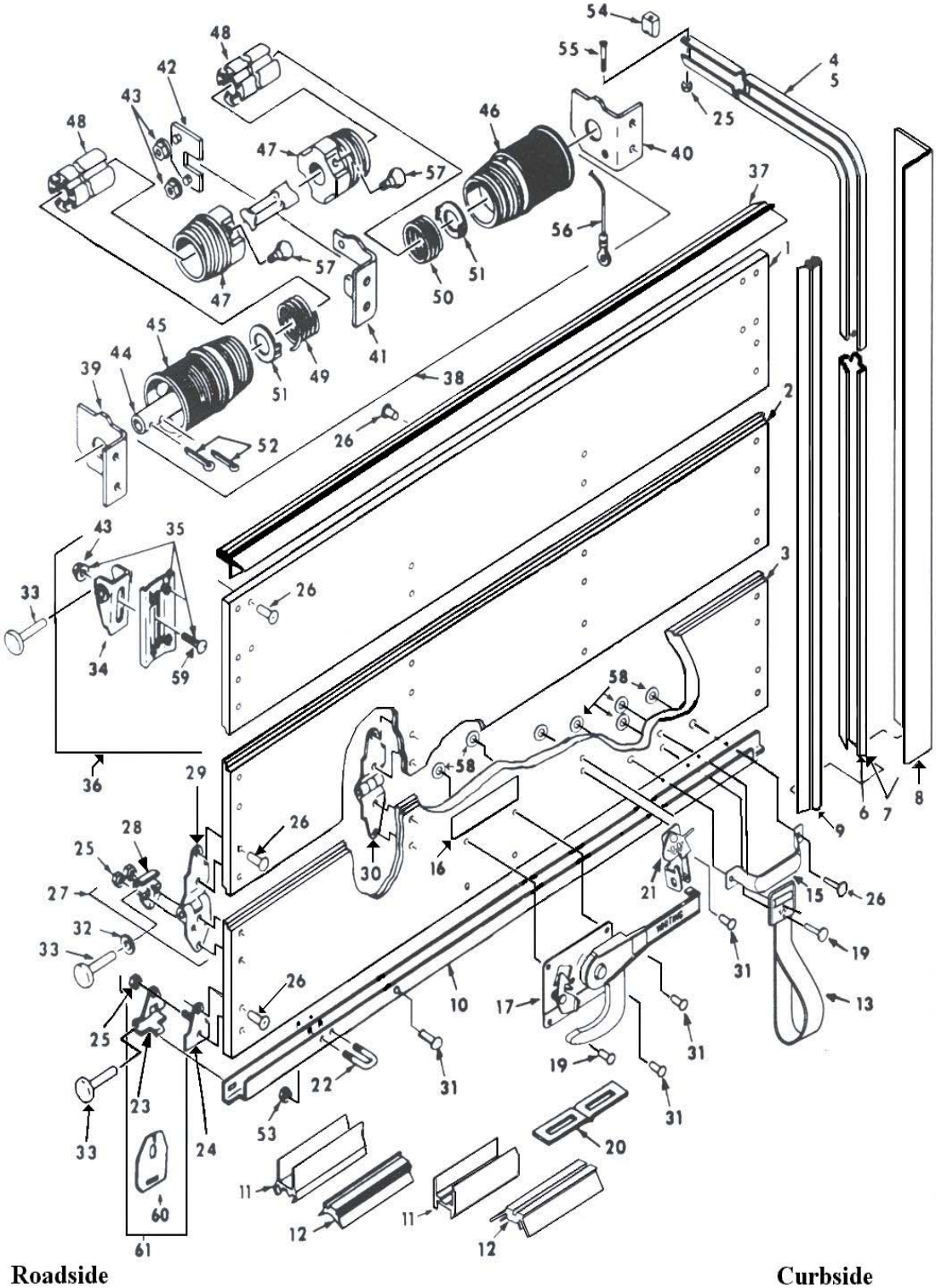

Item	Part No.	Description
1	241	Top Panel Complete- Plastic- Ship Lap Joint (Specify length & width)
1	341	Top Panel Complete- Tongue & Groove Joint (Specify length & width)
1	251	Top Panel Complete- Aluminum- Ship Lap Joint (Specify length & width)
1	351	Top Panel Complete- Aluminum- Tongue & Groove Joint (Specify length & width)
2	242	Intermediate Panel- Plastic- Ship Lap Joint (Specify length & width)
2	342	Intermediate Panel- Plastic- Tongue & Groove Joint (Specify length & width)
2	252	Intermediate Panel- Aluminum- Ship Lap Groove Joint (Specify length & width)
2	352	Intermediate Panel- Aluminum- Tongue & Groove Joint (Specify length & width)
3	248	Bottom Panel Complete, with Seal- Plastic- Ship Lap Joint (Specify length & width)
3	348	Bottom Panel Complete, with Seal- Plastic- Tongue & Groove Joint (Specify length & width)
3	258	Bottom Panel Complete, with Seal- Aluminum- Ship Lap Joint (Specify length& width)
3	358	Bottom Panel Complete, with Seal- Aluminum- Tongue & Groove Joint (Specify length & width)
4,5	11-XX	2” Horizontal Track (Specify length, radius, & curbside or roadside)
6	1031	2” Vertical Track- Roadside or Curbside (Specify length)
7	2275-1	Vertical Track and Mounting Angle Assembly- Curbside (Specify length & size of each)
7	2275-2	Vertical Track and Mounting Angle Assembly- Roadside (Specify length & size of each)
8	XX	Mounting Angle (Specify length & size)
9	5423	Side Seal. Vinyl, Drive in Style (Specify length)
10	18-3	Bottom U Channel- Steel (Specify length, balance & lock type)
11	1801	Bottom U Channel Seal Retainer- Aluminum (Specify length, balance & lock type)
11	8280-2	Bottom U Channel Seal Retainer- Aluminum (Specify length, balance & lock type)
12	1676	Bottom Seal (Specify length) for use with #1801 Channel
12	5735	Bottom Seal (Specify length) for use with #8280-2 Channel
13	9723-XX	Pull Down Strap (Specify door height)
15	1715	Grab Handle
16	3034	“Do Not Move” Decal
17	77	Lock Assembly, No Keeper
19	10-1002-9	Rivet- (1/4 X 1)- ¾ HD Cadium Plated Steel
19	10-1002-49	Rivet- (1/4 X 1-9/32)- ¾ HD Stainless Steel
20	2804	Latch Plate
21	7015	Handle Keeper
22	70-13	Cable Anchor- 1-1/4 U-Bolt
23	1021	Bottom Roller Shaft Cover
24	1370	Bottom Roller Bracket Stud Plate
25	10-1022-1	Kep Nut ¼ X 20

26	10-1002-3	Rivet- (1/4 X 1)- ¾ HD Cadium Plated Steel
27	10-1002-23	Rivet- (1/4 X 1)- ¾ HD Stainless Steel
28	10-1002-73	Rivet- (1/4 X 1)- ¾ HD Aluminum
29	1209	Roller Hinge Complete with Cover Clamp and Nuts
30	1208	Roller Hinge Cover Clamp
31	1207	Roller Hinge
32	6	Center Hinge
33	3228	2” Nylon Roller
33	2996	2” Steel Roller
34	6943	Top Closure Slide
35	1264	Top Closure Base with Nuts & Bolts
36	6944	Top Closure Assembly Complete
37	4032	Top Seal (Specify length)
38	2376	Balance Assembly (Less Items 39-43, 52, 56) (Specify wire size, spring length & shaft length)
39	2524	Balance Bracket- Roadside
40	2523	Balance Bracket- Curbside
41	2525	Balance Bracket- Center
42	2526	Balance Bracket Clamps
43	10-1063-1	Self Locking Nuts (5/16-18)
44	2528	Balance Shaft (Specify length)
45	2547	Cable drum and Bearing Assembly (2901)- Roadside
46	2548	Cable Drum and Bearing Assemble (2902)- Curbside
47	2518	Winding Cone
48	2471	Spring Spacer (Cut to Relaxed Spring Length + 4-1/4”)
49	2704	Torsion Spring- Roadside- LH Wound (Specify Size)
50	2705	Torsion Spring- Curbside- RH Wound (Specify Size)
51	2522	Thrust Washer
52	10-1009-8	Cotter Pin (3/16 X 1-1/2)
53	10-1003-2	Self Locking Nut (5/16 X 18)
54	83	2” Track Stop Bumper
55	10-1010-3	Bolt (1/4-20 X 2-12)
56	1-XX	1/8” Stainless Steel Cable with 5/16” Eye (Specify door height)
57	2699	Set Screw (3/8-16X 5/8)
58	10-1006-1	Washer (1/4 X ¾)
59	2370	Bolt (5/16 X 5/8)
60	5726	Wear Plate- for Doors with Bottom Seal
61	1371	Complete Bottom Bracket W/ Cover

Rubber
Dock Bumpers
Door Bumpers
Wheel Chocks
Mud Flaps

Part DB/MERITT-24

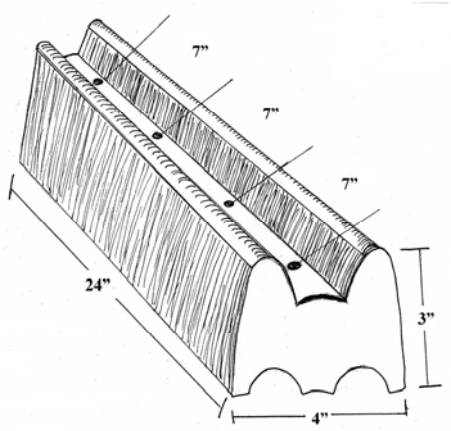

Solid Dock Bumper

4 Holes on 7” Centers

Weight 9.5lbs

Kidron OEM # K930349

Part DB1

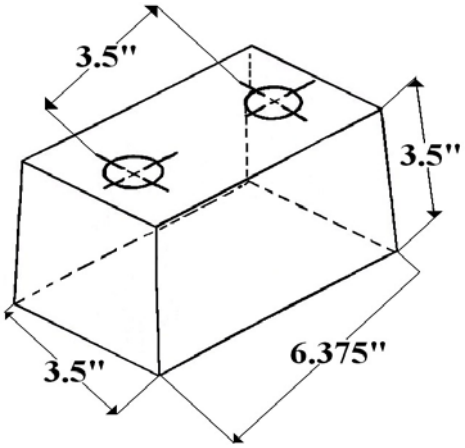

Solid Dock Bumper

2 Holes on 3.5” Centers

Weight 4.5lbs

Part DB2

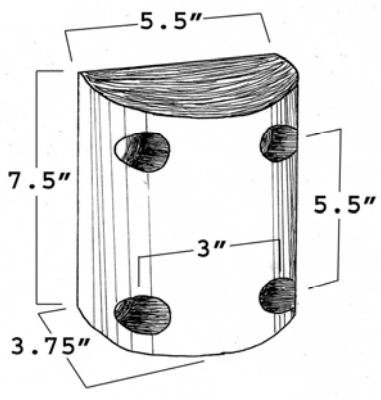

Solid Dock Bumper

4 Holes

Weight 5.5lbs

Kidron OEM # 93003

Part DB3-18

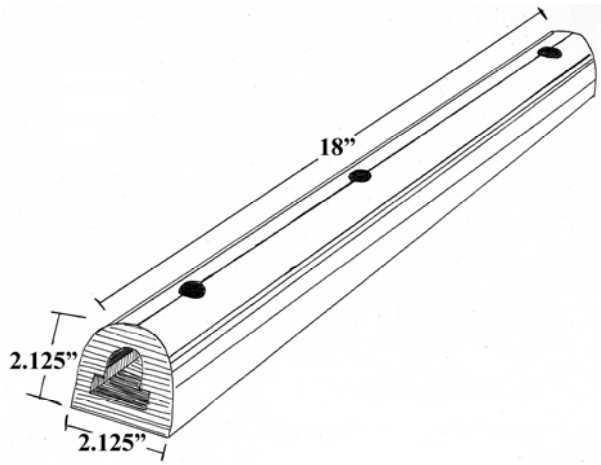

Hollow Dock Bumper

3 Holes on 7.5” Centers

Weight 2lbs

Supreme OEM # 255037

Part DB3-32

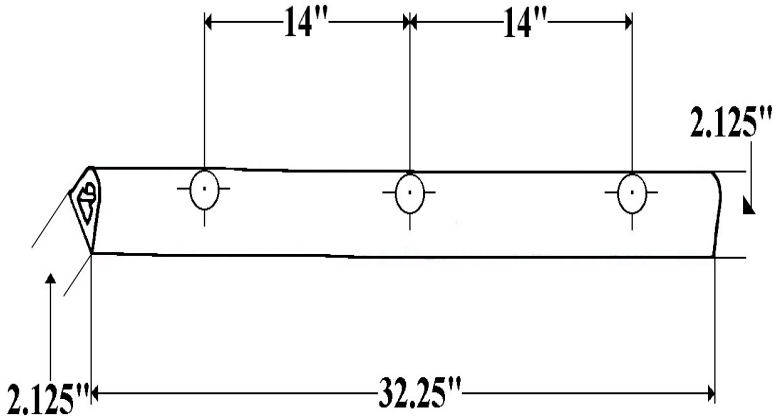

Hollow Dock Bumper

3 Holes on 14” Centers

Weight 4lbs

Part DB3-MOR

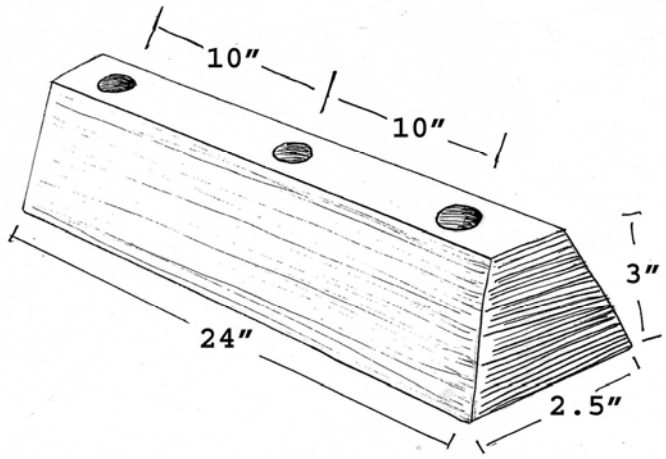

Solid Dock Bumper

3 Holes on 10” Centers

Weight 8.7lbs

Morgan OEM # 076263

Part DB4

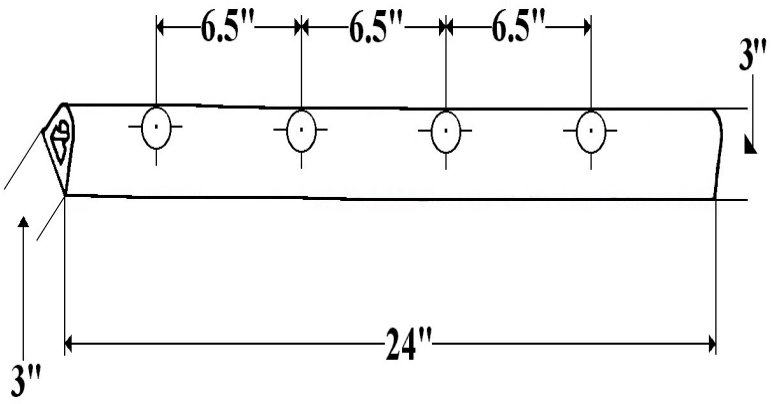

Hollow Dock Bumper

4 Holes on 6.5” Centers

Weight 6.7lbs

Part DB5

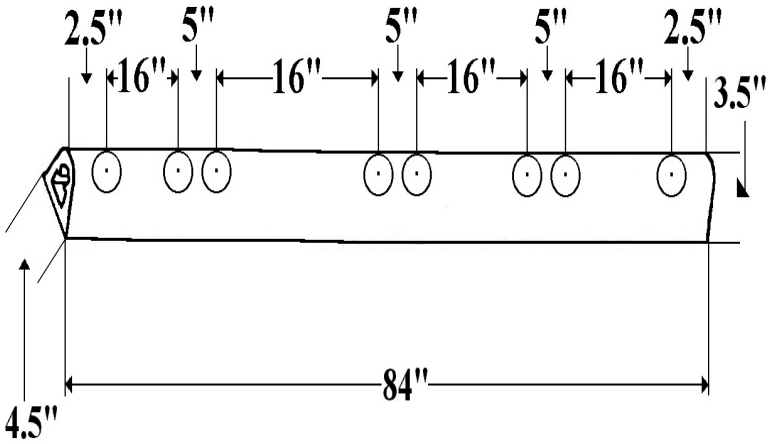

Hollow Dock Bumper

8 Holes

Weight 35lbs

Part DB6-12S

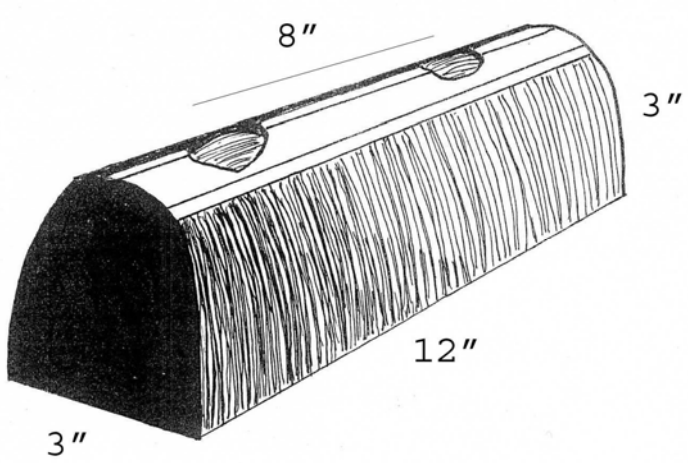

Solid Dock Bumper

2 Holes on 8” Centers

Weight 3.75 lbs

Part DB6-24S

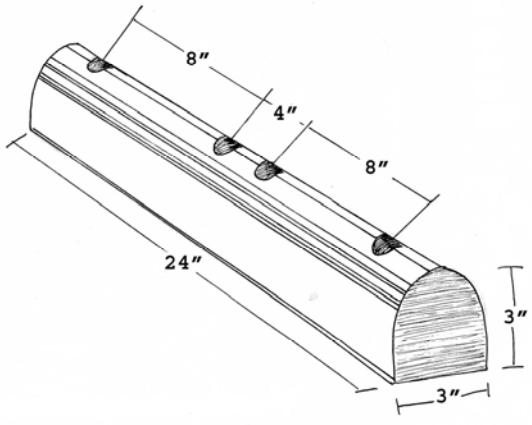

Solid Dock Bumper

4 Holes

Weight 7.5 lbs

Morgan OEM # 076264

Kidron OEM # K946791

Supreme OEM # 255128

Part DB7-12

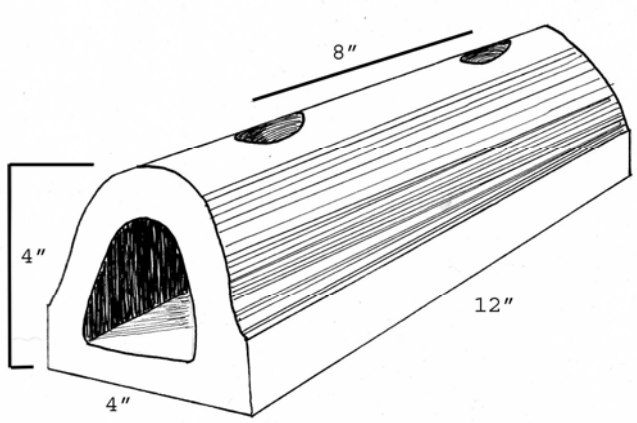

Hollow Dock Bumper

2 Holes on 8” Centers

Weight 4 lbs

Part DB7-24

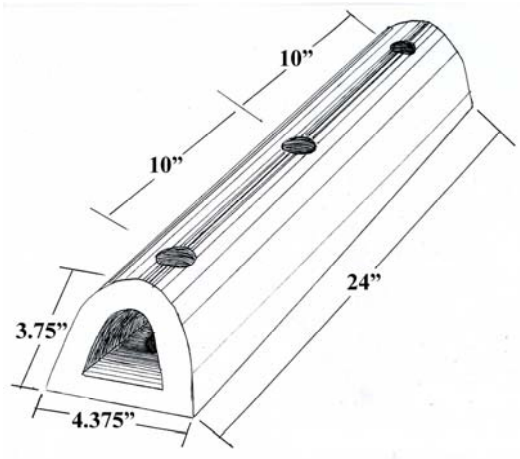

Hollow Dock Bumper

3 Holes on 10” Centers

Weight 6.75 lbs

Supreme OEM # 255109

Part DB8

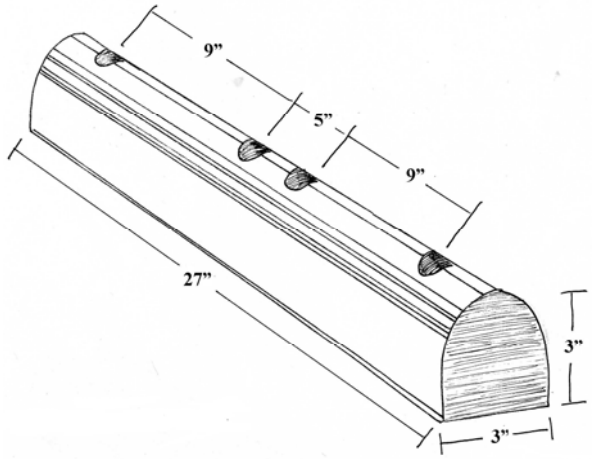

Solid Dock Bumper

4 Holes

Weight 8.2 lbs

Morgan OEM # 076267

Supreme OEM # 255045

Part DB9

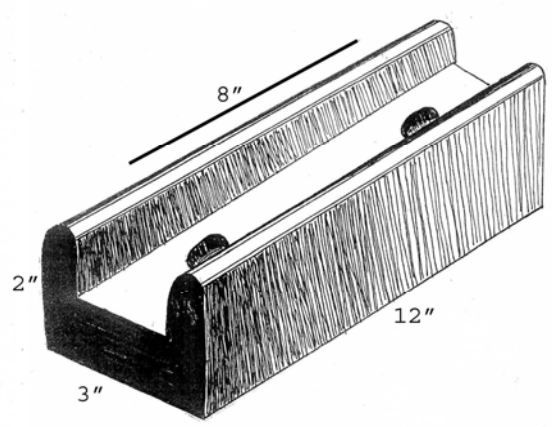

Solid Dock Bumper

2 Holes on 8" Centers

Weight 2.9 lbs

Part DB10

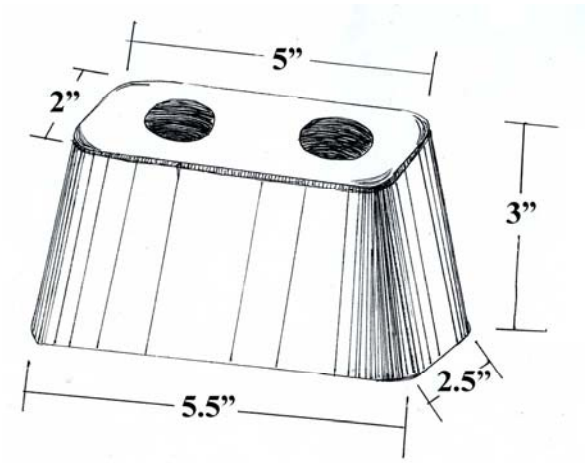

Solid Dock Bumper

2 Holes

Weight 2 lbs

Part DB11

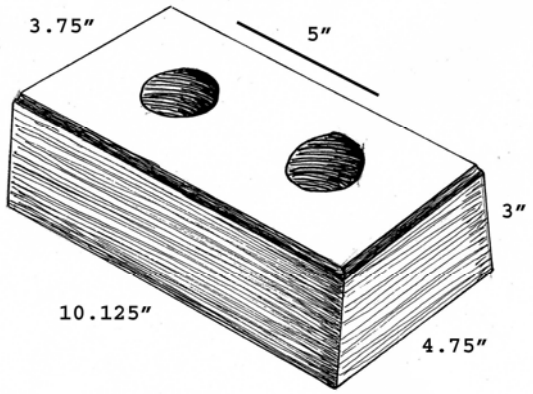

Solid Dock Bumper

2 Holes on 5” Centers

Weight 7 lbs

Part DB12

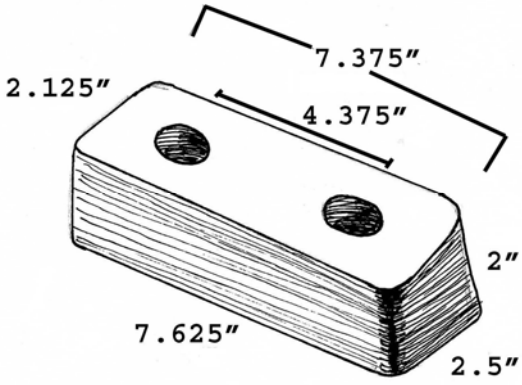

Solid Dock Bumper

Weight 2 lbs

Part DB15

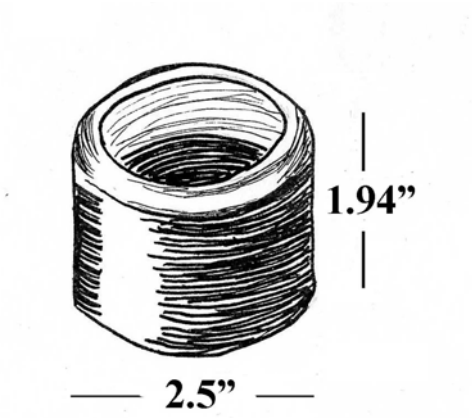

Door Bumper

Weight .5 lbs

Morgan OEM # 076572

Part DB16

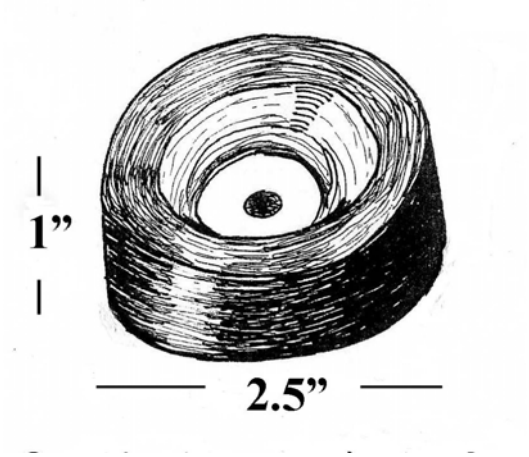

Door Bumper

Weight .25 lbs

A M Haire OEM # 59008

Morgan Buyer’s Products # B1001

Part DB17

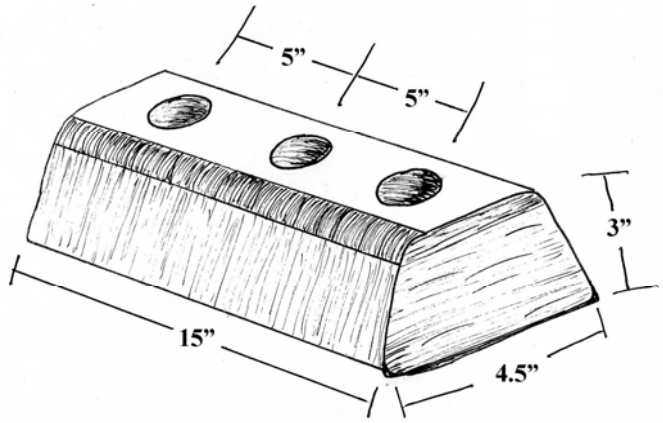

Solid Dock Bumper

3 Holes on 5” Centers

Weight 8 lbs

Part DB18

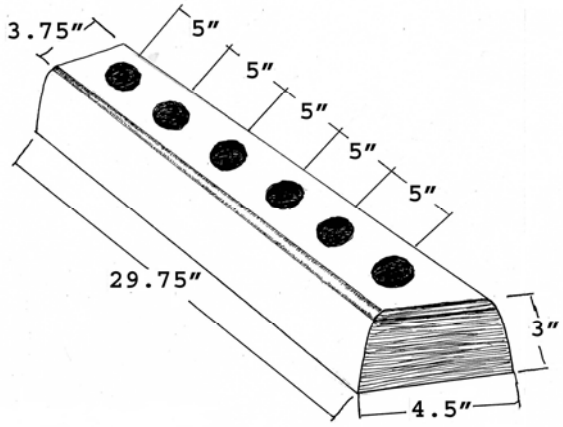

Solid Dock Bumper

6 Holes on 5” Centers

Weight 15.5 lbs

Part DB19

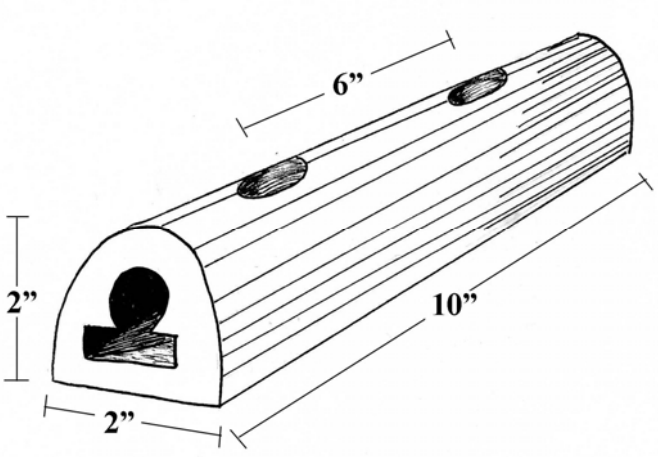

Hollow Dock Bumper

2 Holes on 6” Centers

Weight 1.5 lbs

Part WC1

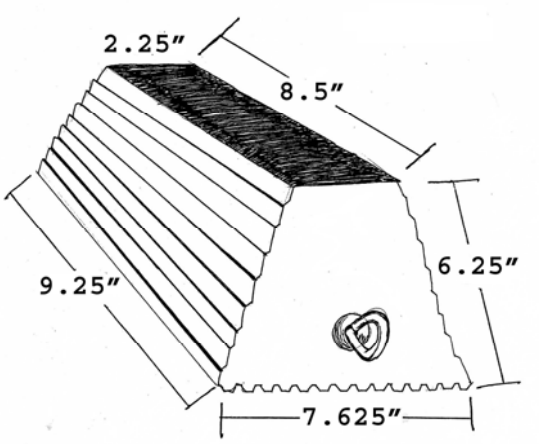

12 lbs

Part WC2

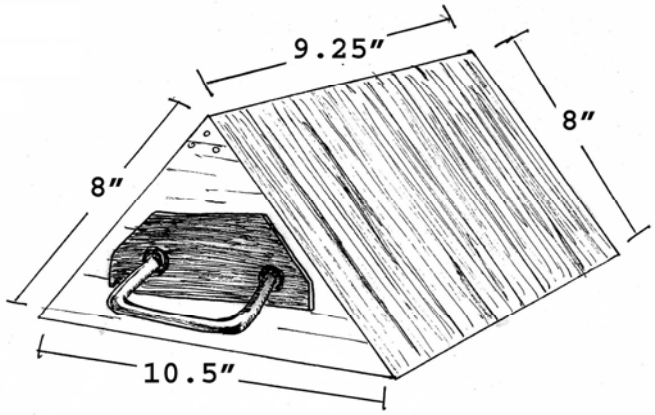

15.5 lbs

Hardware & Fasteners

HEAVY DUTY CAM ACTION SIDE DOOR LOCK

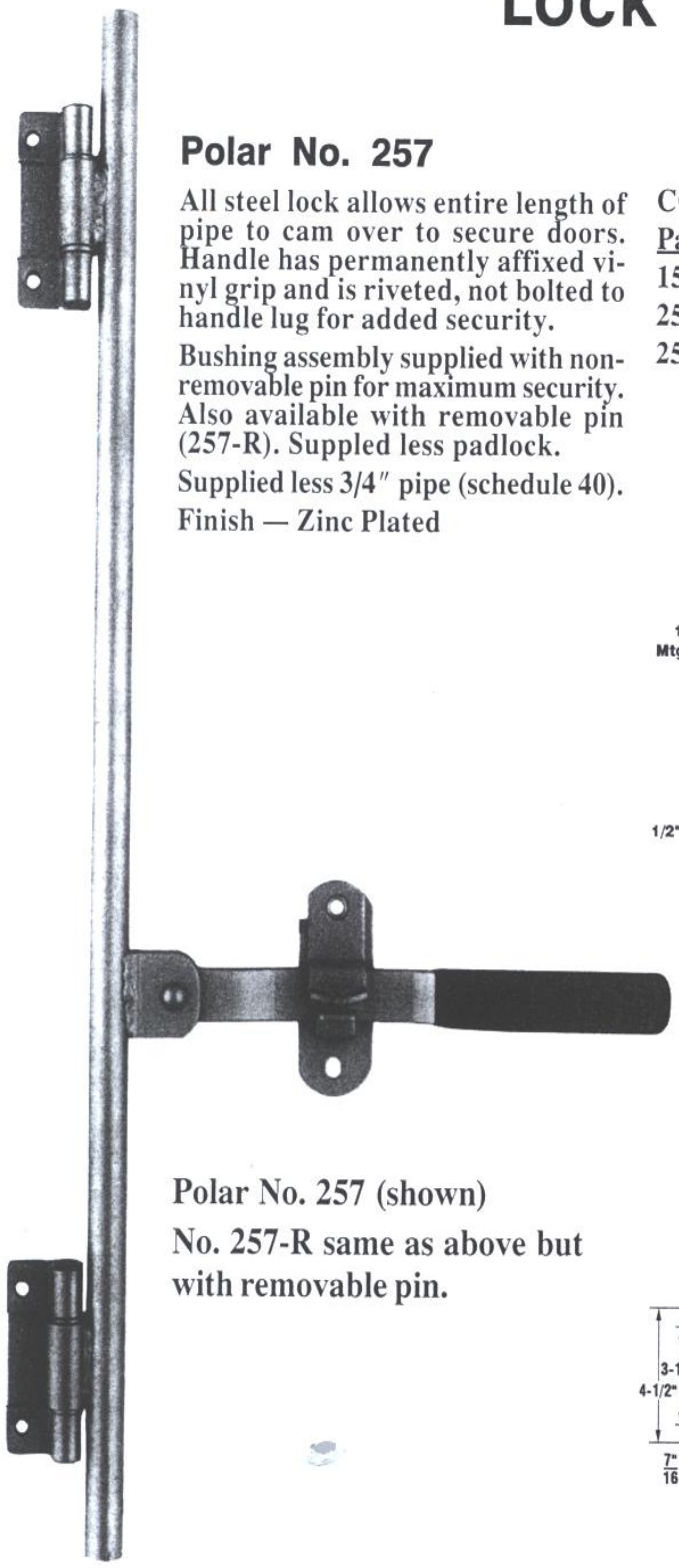

Polar No. 257

All steel lock allows entire length of pipe to cam over to secure doors. Handle has permanently affixed vinyl grip and is riveted, not bolted to handle lug for added security.

Bushing assembly supplied with non-removable pin for maximum security. Also available with removable pin (257-R). Suppled less padlock.

Supplied less 3/4″ pipe (schedule 40).

Finish — Zinc Plated

COMPONENT PARTS FOR 257 LOCK

Part No.	Description
157-100	Bushing Assy
258-100	Handle Assy
258-101	Hasp & Handle Keeper

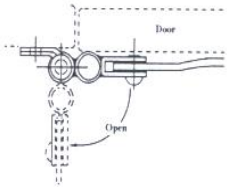

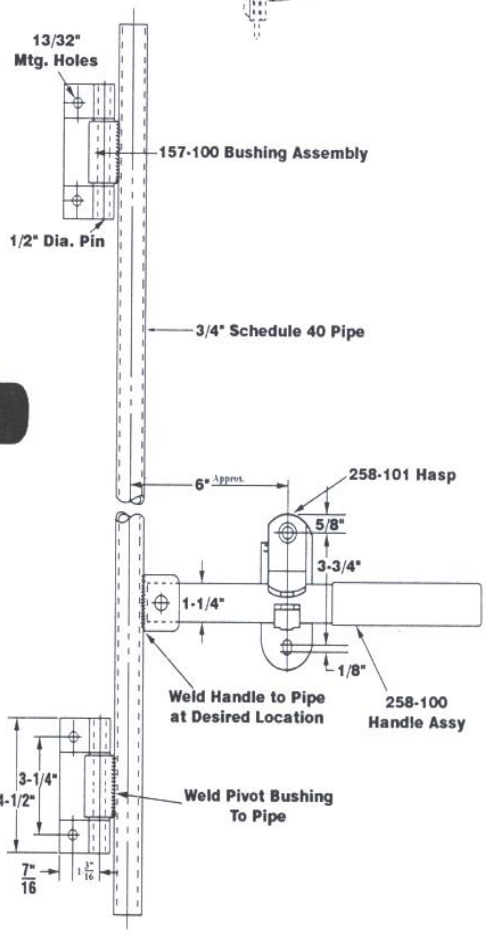

Polar No. 257 (shown)

No. 257-R same as above but with removable pin.

DIMENSIONAL DRAWING
No. 257

HEAVY DUTY CAM ACTION DOOR LOCKS

258-001

258-002

Polar No. 258-001

Same as Polar No. 258-002 except Universal keeper is 1-15/16″ wide.

Polar No. 258-002

For Flush to 3/4″ offset doors. Uses standard 3/4″ Pipe.

Handle has permanently affixed vinyl grip and is riveted, not bolted, to lug for maximum security. Features narrow 1-1/4″ wide keepers for side or rear door application. Maximum extension from body 1-3/4″. All mounting holes for 3/8″ bolts.

Lugs and keepers are made from ductile iron. The handle, hasp & pipe retainers are manufactured from steel.

Universal for right or left hand doors. (Right hand shown).

Note: Supplied less padlock

Finish:

Lugs & keepers are hot dip galvanized.

Hasp, pipe retainers & handle assembly are zinc plated.

Supplied without 3/4″ pipe.

Weight (without pipe) — 10 lbs.

Polar No. 258-003

Same as 258-001 except with adjustable handle to adjust lock tighter as seal wears. See page 8 for handle.

Polar No. 258-004

Same as 258-002 except with adjustable handle. See page 8 for handle.

258 COMPONENT PARTS

Polar No. 258-100 Handle & Lug Assembly

All Steel handle with vinyl grip.
Finish — Zinc plated
Weight—2.5 lbs.

No. 258-101 Hasp & Handle Keeper

5-1/8" long x 2" wide x 1-3/4" high.
Note: Padlock not supplied
Finish — Zinc plated
Weight — .6 lbs.

No. 258-225 Spacer

Steel Spacer for 258-101 Hasp.
Finish — Zinc plated
Weight — .4 lbs.

Polar No. 258-103 Safety Hasp & Inside Handle

For use with Polar No. 258 and 257 pipe locks. All steel construction. Zinc plated. Permits exit from inside even when padlocked. "T" handle is rotated counter clockwise until hasp is disengaged permitting door to swing open. Note: Padlock not included.
Finish — Zinc plated
Weight — 1-1/2 lbs.

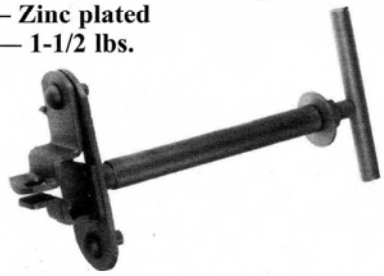

No. 258-201 Wide Keepers

Ductile iron wide keeper
Dimensions 5" long x 1-15/16" widex 1-5/8" high.
Universal for top & bottom.
Finish — Zinc plated
Weight — 1.3 lbs.

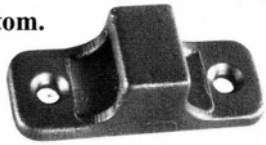

Polar No. 258-102 Adjustable Handle

All steel handle with vinyl grip. No cutting of pipe or welding necessary. Tubing slides over pipe and adjustment is made by loosening and tightening Nylok set screws. Adjustment allows for tight seal as door gasket wears.
Finish — Zinc plated
Weight — 3 lbs.

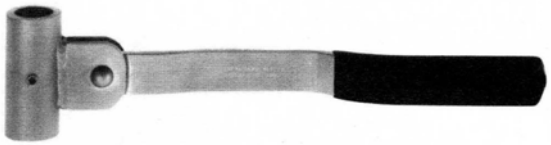

No. 258-202 Top Lug (shown) No. 258-210 Bottom Lug

Ductile Iron lugs.
Dimensions 3" extension from pipe finger 1" wide x 3" long.
Finish — Galvanized
Weight — 1.2 lbs.

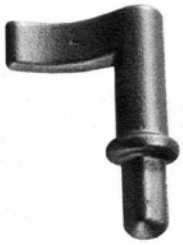

Narrow Keepers No. 258-220 Bottom (shown) No. 258-222 Top

Ductile iron narrow keepers
Dimensions 6" long x 1-1/4" wide x 1-13/16" high.
Finish — Galvanized
Weight - 1.2 lbs.

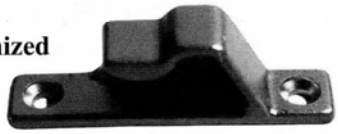

Polar No. 258 Lock Pipe Retainers

All Steel
Finish — Zinc Plated

258-206 Top

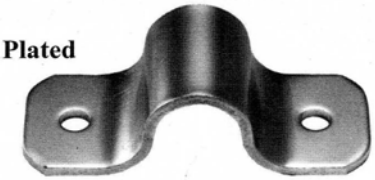

258-205 Bottom

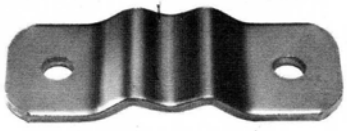

258 - 358 COMPONENT PARTS
Steel, Stainless Steel and polished Stainless Steel

No. 258 Lugs
Cast Steel or Stainless Steel Lugs
Dimensions:
3" extension from
pipe finger 1" wide x 3" long.
Finish — Steel Galvanized
Stainless - Polished
Weight — 1.2 lbs.

258-202 / 258-202-SS Top
258-210 / 258-210-SS Bottom

Top Shown

No. 258 Narrow Keepers
Cast steel narrow keepers
Dimensions:
6" long x 1-1/4" wide x 1-13/16" high.
Finish — Galvanized
Weight - 1.2 lbs.

258-220 / 258-220-SS Bottom
258-222 / 258-222-SS Top

Bottom Shown

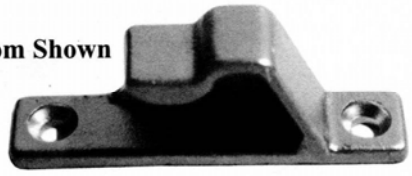

No. 258-201 Wide Keepers
Cast steel wide keeper.
Dimensions:
5" long x 1-15/16" wide x 1-5/8" high.
Universal for top & bottom.
Finish — Zinc plated
Weight — 1.3 lbs.

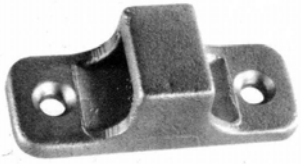

No. 358-206 Lug
Cast Steel or Stainless Steel Lugs
Finger lug for use with 358 or 258 keepers.
Finish — Steel Galvanized
Stainless - Polished
Weight — .6 lbs.

No. 358-201 Keeper
Steel rectangular keeper. Can be used with 258 or 358 locks.
Finish — Zinc Plated
Weight — .4 lbs.

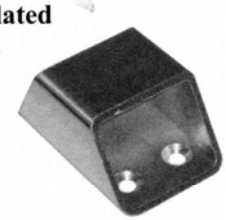

No. 358 Pipe Retainers
Cast Steel pipe retainer offers rigid holding of pipe.
Nylon bearing assures smooth operation.
Finish — Galvanized

358-305 - Bottom
358-306 - Top
358-B - Nylon bearing (2 pcs)

No. 259 Sliding Door Lock
Can purchase the complete lock or lugs only
Finish — Zinc Plated

U-Bolts

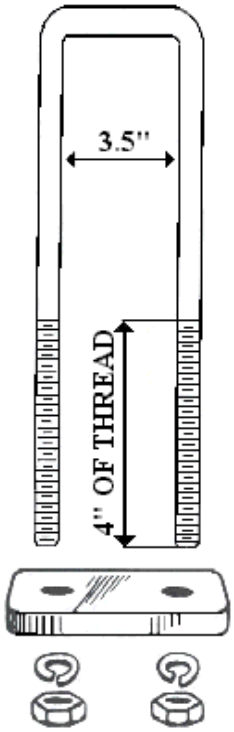

Body Attaching U-Bolt Kits

Each Kit Contains:
4- Square Bend U-Bolts With 4" No 11 N.C. 5/8 Thread
8- Hex Nuts
8- Lock Washers
4- 1.5" X 1.5" X 3.5" Tie Bars

Combine Sizes And Get A Discount... Call Us For Details

Other Sizes Available On Special Order

Part #	Size
UBK12	12” Legs
UBK14	14” Legs
UBK16	16” Legs
UBK18	18” Legs
UBK20	20” Legs
UBK22	22” Legs
UBK24	24” Legs

5/8" Tie Rods

HEX NUTS AND LOCK WASHERS SUPPLIED SEPARATELY

5/8" 11 Hex Nut
5/8" Lock Washer

4” THREAD

Part #	Size
TR5/8X12	12”
TR5/8X14	14”
TR5/8X16	16”
TR5/8X18	18”
TR5/8X20	20”
TR5/8X22	22”
TR5/8X24	24”

(Size of Stock 1.5" X 0.5")

Tie Bars

Tie Bars (Yokes) are sized by the space between the holes. We can manufacture to your specifications.

Part #	Size
TB3	3” Yokes
TB3.5	3.5” Yokes
TB4	4” Yokes

Standard Brazier Head Aluminum Rivets

A	B	C
3/16”	0.467”	0.094”
1/4”	0.625”	0.125”

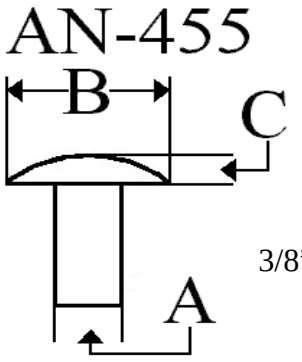

Alloys:
1100F (Soft)
2117T4 (Hard)

Stock Lengths:
3/8”, 7/16”, 1/2”, 5/8”, 3/4”

Nylon-Tap-It

Dia	Length	Qty Per Bag
1/4”	3/4”	1000
1/4”	1”	1000
1/4”	1-1/2”	500

Uni-Tap

Dia	Length	Qty Per Bag
1/4”	1”	500
1/4”	2”	500

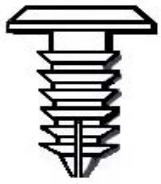

Protruding Head
Multi-Grip

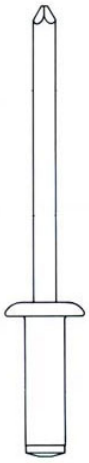

Part #	DIA	Grip
AS613D-MG	3/16	.062-.250
AS619D-MG	3/16	.187-.437
AS621D-MG	3/16	.250-.500
AS631D-MG	3/16	.500-.781

Large Flange Head
Multi-Grip

Part #	DIA	Grip
AS613LF-MG	3/16	.062-.250
AS621LF-MG	3/16	.250-.500
AS631LF-MG	3/16	.500-.781

Brazier Head
Multi-Grip

Part #	DIA	Grip
AS613BZ-MG	3/16	.062-.250
AS621BZ-MG	3/16	.187-.437

Monobolt

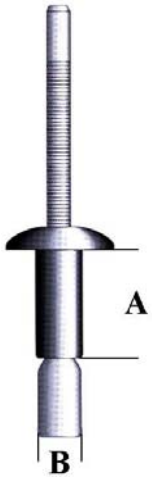

Part #	DIA	Grip
RV6977-6-4	3/16	.062-.270
RV6977-6-7	3/16	.214-.437
RV6977-8-6	1/4	.080-.375
RV6977-8-10x	1/4	.080-.625

Closed End Rivets

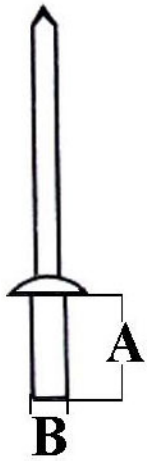

Part #	DIA	Grip
AS64D-CE	3/16	.126-.250
AS66D-CE	3/16	.251-.375
AS68D-CE	3/16	.375-.500

Blind Rivet

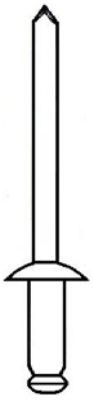

Part #	DIA	Grip
SBS84	1/4	.125-.250
SBS88	1/4	.375-.500
SBS810	1/4	.500-.625
SBS812	1/4	.626-.750
SBS814	1/4	.751-.875
SBS816	1/4	.876-1.000

T-Nut

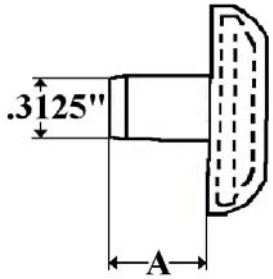

5/16-18X7/16 Grey
5/16-18X7/16 White
5/16-18X5/8 White

Ribbed T-Nut

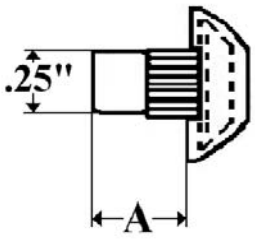

1/4-20 X 7/16 Grey
1/4-20 X 7/16 White
5/16-18-1/2 Grey
5/16-18-1/2 White

Barbed T-Nut

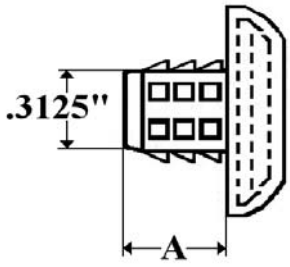

5/16 X 1/2 Barbed White

T-Nut Bolt

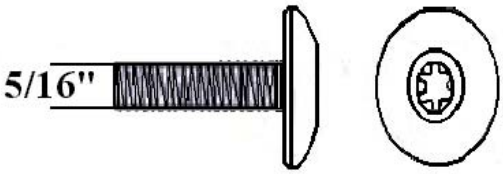

5/16-18X1/2" Torx HD
5/16-18X3/4" Torx HD
5/16-18X1" Torx HD

Washer Head Bolt

All with Patch

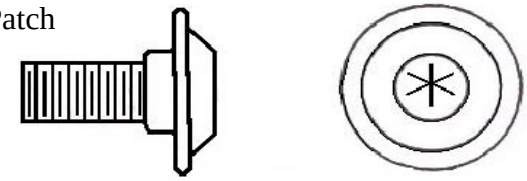

WHB1/4-20X1/2" Yellow
WHB1/4-20X1/2NS Yellow No Shoulder
WHB1/4-20X5/8" Green
WHB1/4-20X3/4" Blue
WHB1/4-20X1" Brown
WHB5/16-18X1/2" Yellow
WHB5/16-18X1/2NS Yellow No Shoulder
WHB5/16-18X5/8" Green

1/4" use TX 30 Bit 5/16" use TX 40 Bit

Camtainer Bolt

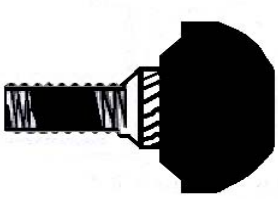

880-60411
880-60501
880-60718

All with Patch

Camtainer Nut

890-47000
890-48000
890-50000

Uses TX40 Bit

T-Nut Bolt

5/16-18 X 3/4 WITH SEAL & PATCH

USED ON
AMERICAN COMMERICAL

Round Base T Nut

5/16-18 X 3/8

USED ON
AMERICAN COMMERICAL

TEK SCREW SELF TAPPING
#TEK10X1-1/4”

Bumpers

#FLB2 FREIGHTLINER FRONT BUMPER

FITS FREIGHTLINER M2 CHASSIS

AVAILABLE IN ARGENT GRAY POWDER COAT

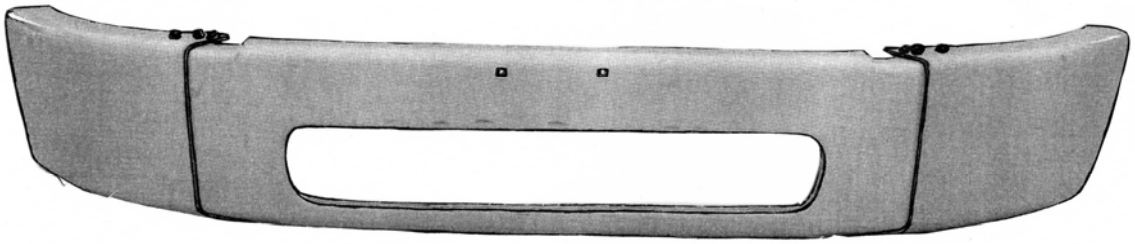

#FB2 FORD FRONT BUMPER

FITS FORD F-650 AND F-750 CHASSIS

AVAILABLE IN ARGENT GRAY POWDER COAT AND CHROME

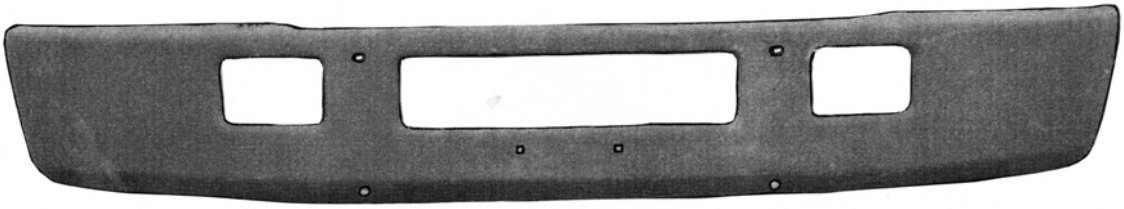

#GB2 (ARGENT) & GB2C (CHROME)

2004 GMC FRONT BUMPER

MODEL: C-6500 & 7500

OEM # 15015455 — CHROME
OEM # 15015457 — ARGENT

93.5”LONG **15.5”WIDE**

#IB1 INTERNATIONAL FRONT BUMPER

FITS 3800, 4600, 4700, 4900 NAVISTAR CHASSIS

GLOSS GRAY POWDER COATED
OEM #1657751C2

ALSO AVAILABLE IN CHROME #IB1C

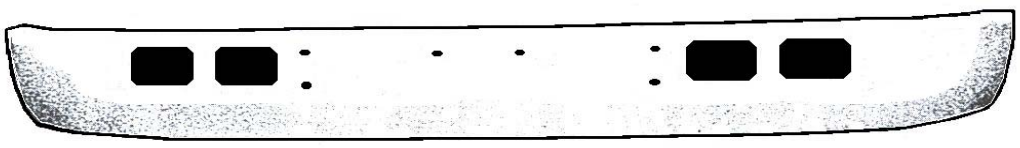

#IB2 INTERNATIONAL FRONT BUMPER

FITS 4200, 4300, 4400 NAVISTAR CHASSIS

IB2 — ARGENT POWDER COAT OEM # 3610930C1
IB2B — BLACK OEM # 3610939C1
IB2C — CHROME OEM # 3610935C1

MODELS BEGINNING 2002

#IB3 INTERNATIONAL FRONT BUMPER

FITS 4200, 4300, 4400 NAVISTAR CHASSIS

IB3 — ARGENT POWDER COAT
IB3B — BLACK
IB3C — CHROME

MODELS BEGINNING 2002

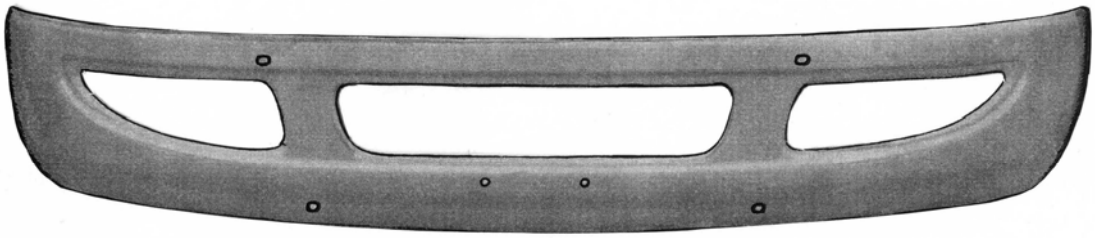

“ADJUSTABLE” Rear Step Bumper

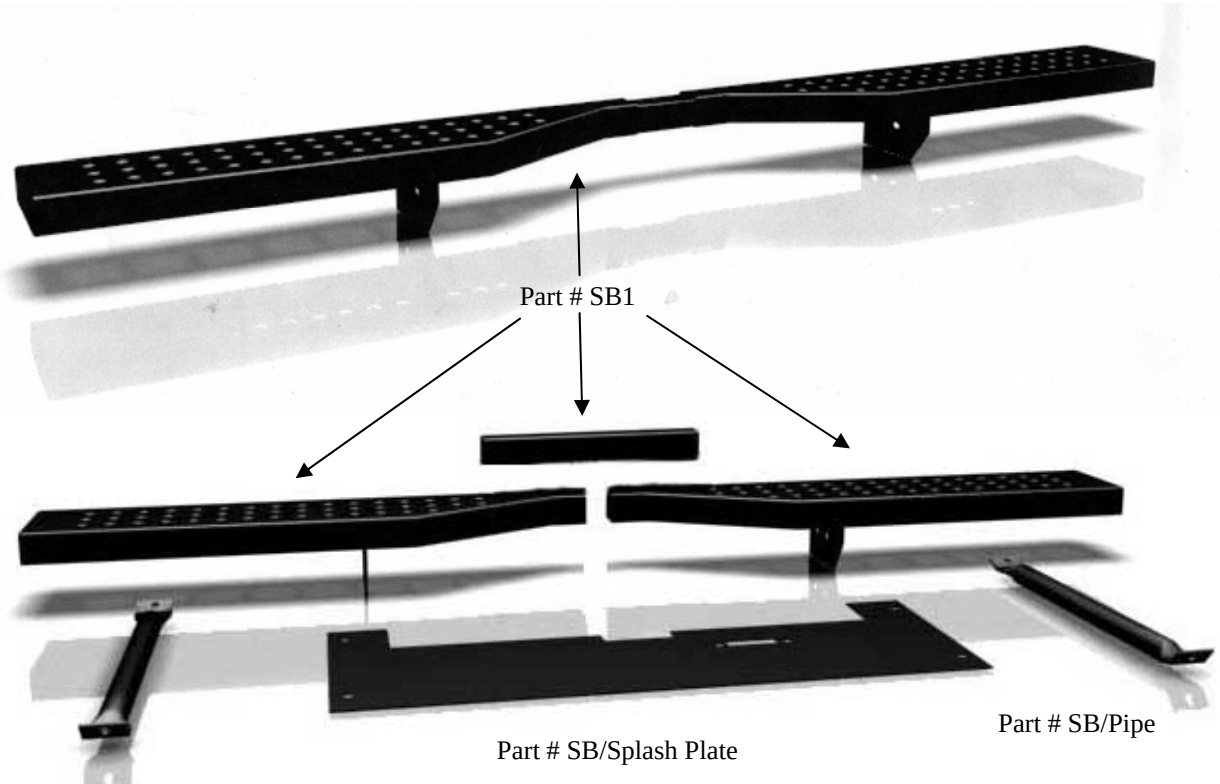

Patent Pending

Miscellaneous

Aluminum Roof

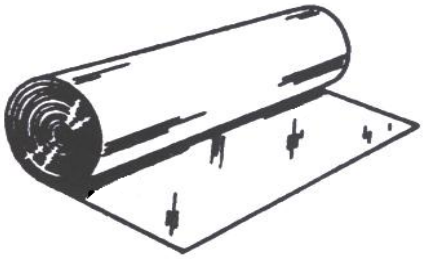

96.5" Width
103" Width
.040 Thickness

Translucent Roof

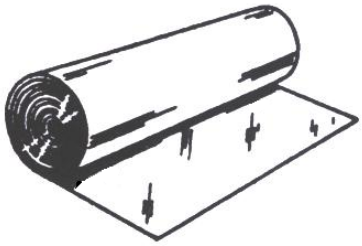

96" Width
102" Width
.075 Thickness

Part 001J/96 (8') 001J/120 (10') & 001J/144 (12')- J-Molding

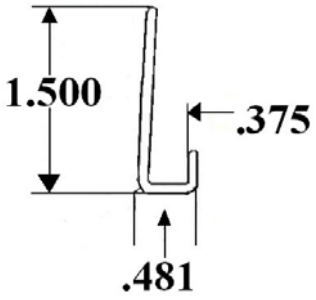

Must use with Translucent Roof

ChemRex Pro 2000 Adhesive Sealant

White **Gray** **Clear**

Silaprene Products

Silaprene Solid Seal

Silaprene All Weather Sealant

Silaprene RTV Silicone

Silaprene SolidBond

North America's Premier Adhesive/Sealant

Silaprene Transportation Adhesive/Sealant

Aluminum Panels

.040 X 49” X 96” PPW
.040 X 49” X 110” PPW
.040 X 49” X 180” PPW
.040 X 49” X 96” RY

PPW– Prepainted White
RY– Ryder Yellow

Aluminum Diamond Plate

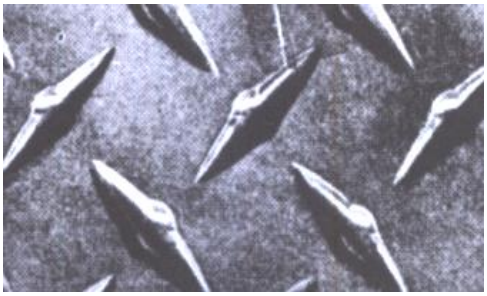

1/8” X 48” X 96”
Alloy 3003

Steel Diamond Plate

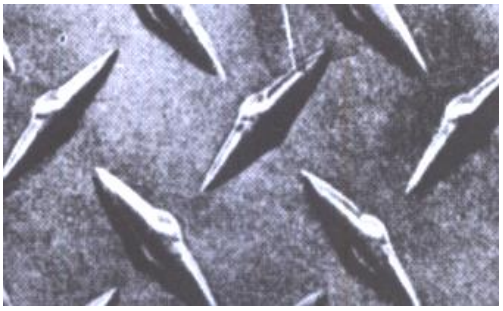

1/8” X 48” X 96”

Stainless Steel Diamond Plate

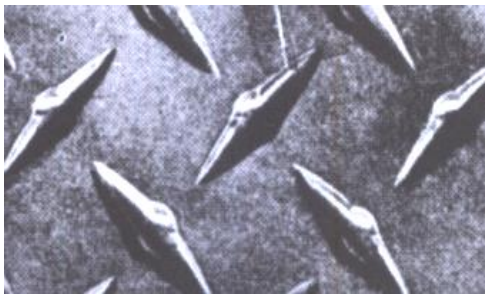

1/8” X 48” X 96”

Part AB- Wooden Apitong Base

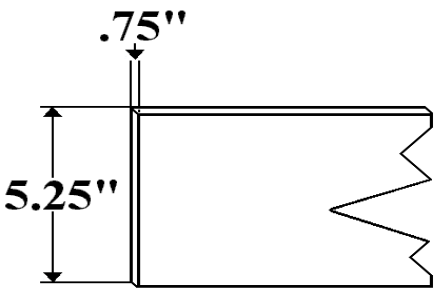

Part AS- Wooden Apitong Slat

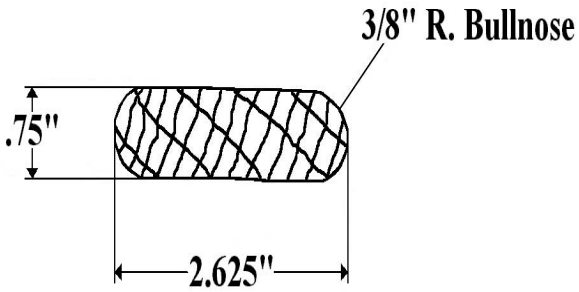

Wafer HD Torv Screw Self-Drilling
#TEK10X1-1/4”

TEK Flat V-Cut HD Phillips Self-Drilling
Part TEX12x1-1/2

TEK Large Flange HD Phillips Self-Drilling
Part TEX12x1-1/2LF

Part 00010- Steel Slat Spacer (97”), 00010/108 (108”)

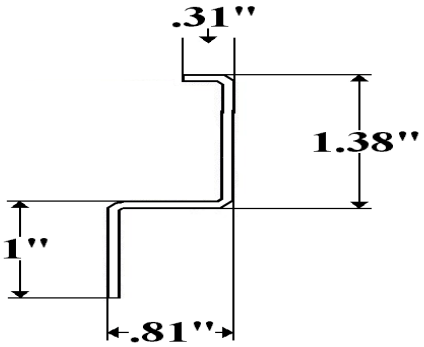

Fiberglass Reinforced Plywood (FRP)

Stock Thickness
3/8”, 1/2”, 5/8”, 3/4”
Stock Widths
24”, 96”, 102”
Stock Lengths
4’ up to 28’
Any Size Available on Special Order

FRP Splice

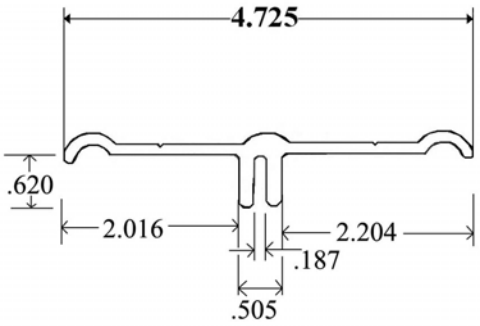

Part 800/24’ & 800/28’

Claw Glass Fiberglass Body Repair Kits

They contain Claw Glas® Fiberglass reinforced filler which make a stronger, waterproof and long-lasting repair for metal and fiberglass. Great for Corvettes! A versatile allpurpose rust and collision mender. Contains either one quart or one gallon of Claw Glas® Fiberglass reinforced filler with red cream hardener, 2 sheet of sandpaper, a pair of disposable gloves, a 2-3/4”X4” plastic spreader and either a 12”X12” or 24”X24” piece of screening material.

Gorilla Hair® and Claw Glas®

are fiberglass reinforce fillers which possess the necessary properties to cover holes in metal and fiberglass parts. These fiberglass products are waterproof, providing a barrier on which to build up finishing layers of body fillers. When used in conjunction with reinforcing materials (fiberglass cloth or mat), large, open areas can be covered without welding or riveting in metal sections. Gorilla Hair® provides an extra long fiberglass reinforcement as well as increased viscosity for use where the hole is 2” or larger. It stays put in very thick applications and can be forced into cracks and crevices, around edges or lips of any surface to make superior bond. Gorilla Hair® provides excellent waterproof base on which base on which to apply additional layers of body filler. Claw Gras® should always be used to cover dent puller holes since body filler can absorb water and cause lack of adhesion under the repaired area. Claw Glas® can be used with or without additional reinforcement on areas where the opening is 1 to 1 -1/2” in size. Both products use red cream hardener.

Claw Glas® Resins & Reinforcements

Polyester resins, providing marine grade hardness, are used for repair and restyling of metal, fiberglass and wood. Typically, these materials are used with extra reinforcement such as our cloth or mat. Clausen offers both regular and heavy-bodied resins. Regular resin provides excellent wet out properties along with tremendous adhesion. Heavy-bodied grades offer a material thicker in viscosity. This material also provides excellent wet out of reinforcements and is easier to work due of reinforcements and is easier to work due to its thicker viscosity. It is packaged with clear liquid hardener.

FIBERGLASS MATERIALS

Gorilla Hair and **Claw Glas** are fiberglass-reinforced fillers, which possess the necessary properties to cover holes in metal and fiberglass parts. These fiberglass products are waterproof, providing a barrier on which to build up finishing layers of body fillers. When used in conjunction with reinforcing materials (fiberglass cloth or mat), large, open areas can be covered without welding or riveting in metal sections. **Gorilla Hair** provides a long fiberglass reinforcement as well as increased viscosity for use where the hole is 2" or larger. It stays put in very thick applications and it can be forced into cracks and crevices, around edges or lips of any surface to make a superior bond. **Gorilla Hair** provides an excellent waterproof base on which to apply addition layers of body filler. **Claw Glas** should always be used to cover dent puller holes since body filler can absorb water and cause lack of adhesion under the repaired area. **Claw Gras** can be used with or without additional reinforcement on area where the opening is 1-1½" in size. Both products use red cream hardener. The part numbers for **Gorilla Hair** is 502100 for a full quart and 502200 for full gallon. The **Claw Glas** parts numbers are 501100 for full quart and 501200 for Full Gallon.

Claw Plast panel adhesive and filler. It should be used for fiberglass bonding and filling. **Claw Plast** gives better adhesion, featheredges beautifully, and gives superior paint holdout. **Claw Plast** is also designed for "bake systems and offers high heat resistance to eliminate blistering and loss of adhesion. It is packed with red cream hardener. Claw Plast has two part numbers, 104100 for a quart and 104200 for gallon.

Claw Glas Resins & **Claw Glas Fiberglass Mat**- Polyester resins, providing marine grade hardness, are used for repair and restyling of metal, fiberglass and wood. Typically, these materials are used with extra reinforcement, such as a mat. Clausen offers both regular and heavy-bodied resins. Regular resin provides excellent wet out properties along with tremendous adhesion. Heavy bodied grades offer a material thicker in viscosity. This material also provides excellent wet out of reinforcements and is easier to work due to its thicker viscosity. It is packaged with clear liquid hardener. Claw Glas Fiberglass Resins comes in two sizes: a full quart's part number is CGFR-1 and a full gallon's part number is CGFR-2. For an 8 square-foot Fiberglass Mat, the part number is 702100. For a 24 square-foot Fiberglass Mat, the part number is 702200.

RECESSED ROPE RING

No. 601

For use with 3/8″ plywood. Manufactured from 14 ga. steel. Pan recessed 3/8″ to allow mounting direct to truck body or trailer body cross members. 3 Mounting holes countersunk for 1/4″ screws.

Specifications:
Overall length — 5″
Overall width — 3-1/2″
Depth — 3/8″
Finish — Zinc plated
Weight — 1/2 lb.

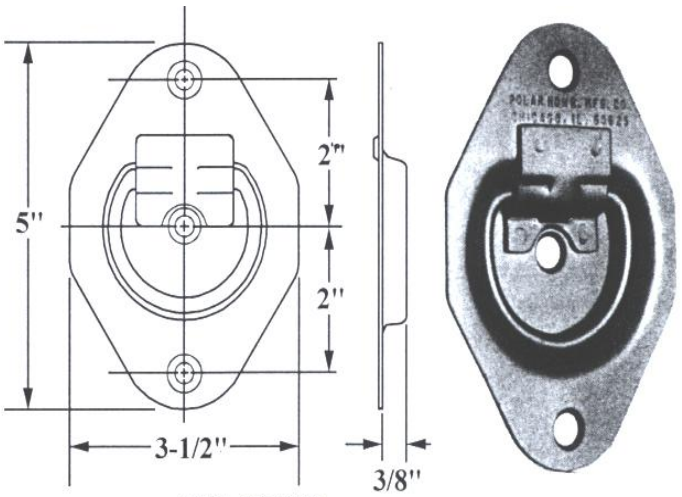

RECESSED ROPE RING

No. 701

For use with 1/4″ plywood. Manufactured from 16 ga. steel. Solid one piece construction dish design assures strong retention of 1/4″ dia. D-Ring. 3-1/2″ dia., 2 mounting holes for 1/4″ screws.

Finish — Zinc plated
Weight — 1/2 lb.

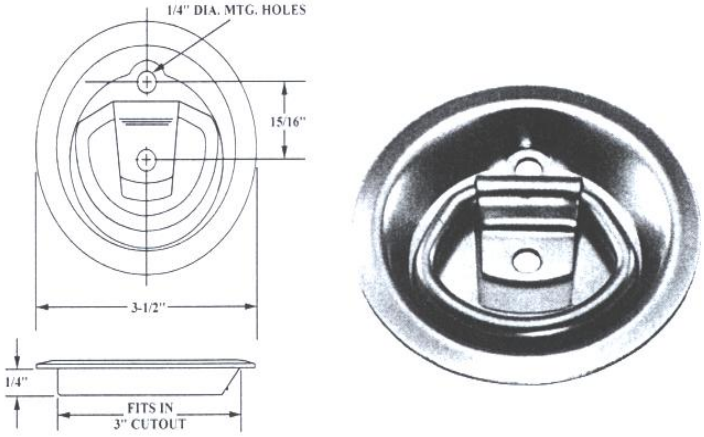

TRIM RING

No. 701-201

Black plastic trim ring for surface mounting of the 701 rope ring.
4.2″ diameter, .3″ thick.

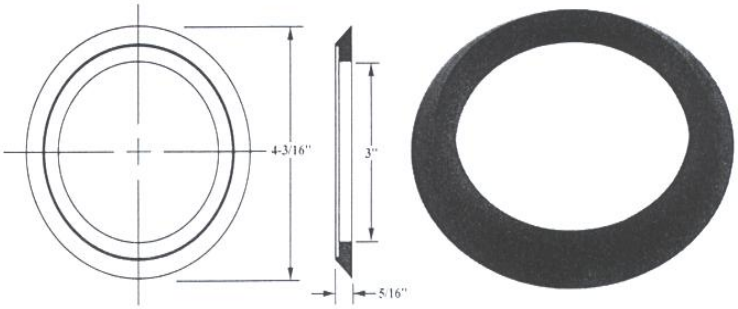

ECONOMY ROPE RING

No. 700

Surface mount rope ring and mounting strap.

Specifications:
Bracket — 10 Ga. Steel
″D″ Ring — .225 Dia. Steel
Finish — Zinc Plated

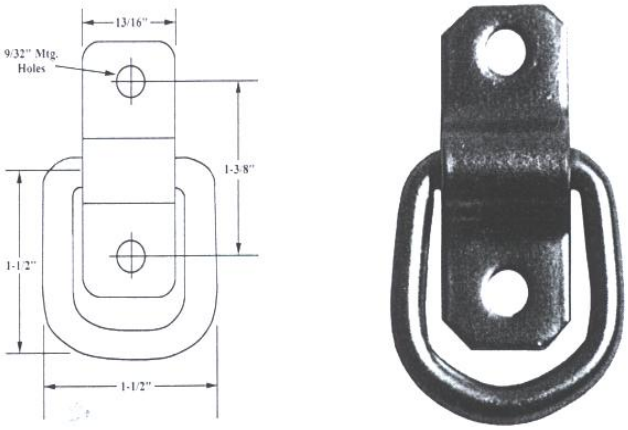

POLAR HOLDTITE DOOR LOCKS

Available Polished Stainless Steel or Gray Powder Coated

Polar cam type locks have been widely used and given dependable service for many years. May be used on single doors, double doors, or end gates. Ideal for refrigerated or van bodies. Reversible for right or left hand doors. Available with two or three locking points. Handle may be located at the most convenient point. A rugged lock with ample leverage to clamp door tight or break frost seal. Padlocking handle. Note: Padlock not included

5/8" Square Steel Rod Supplied Separately.

Available: - 304 Polished Stainless Steel
- Ductile Iron - Zinc Plated & Gray Powder Coated

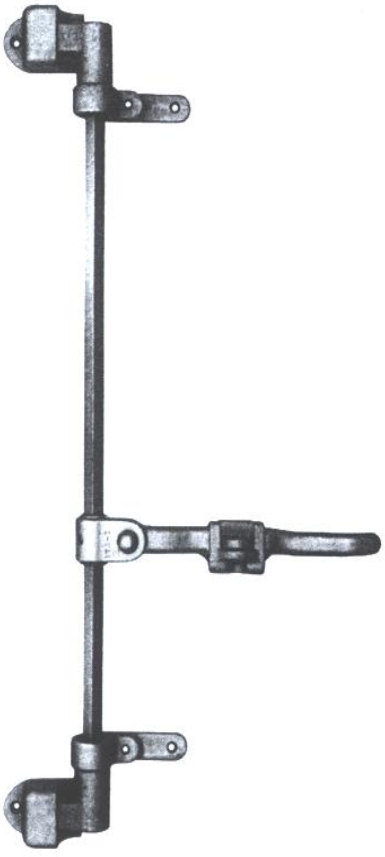

No. 172
2-Point Cam Lock
Weight 20 lbs.

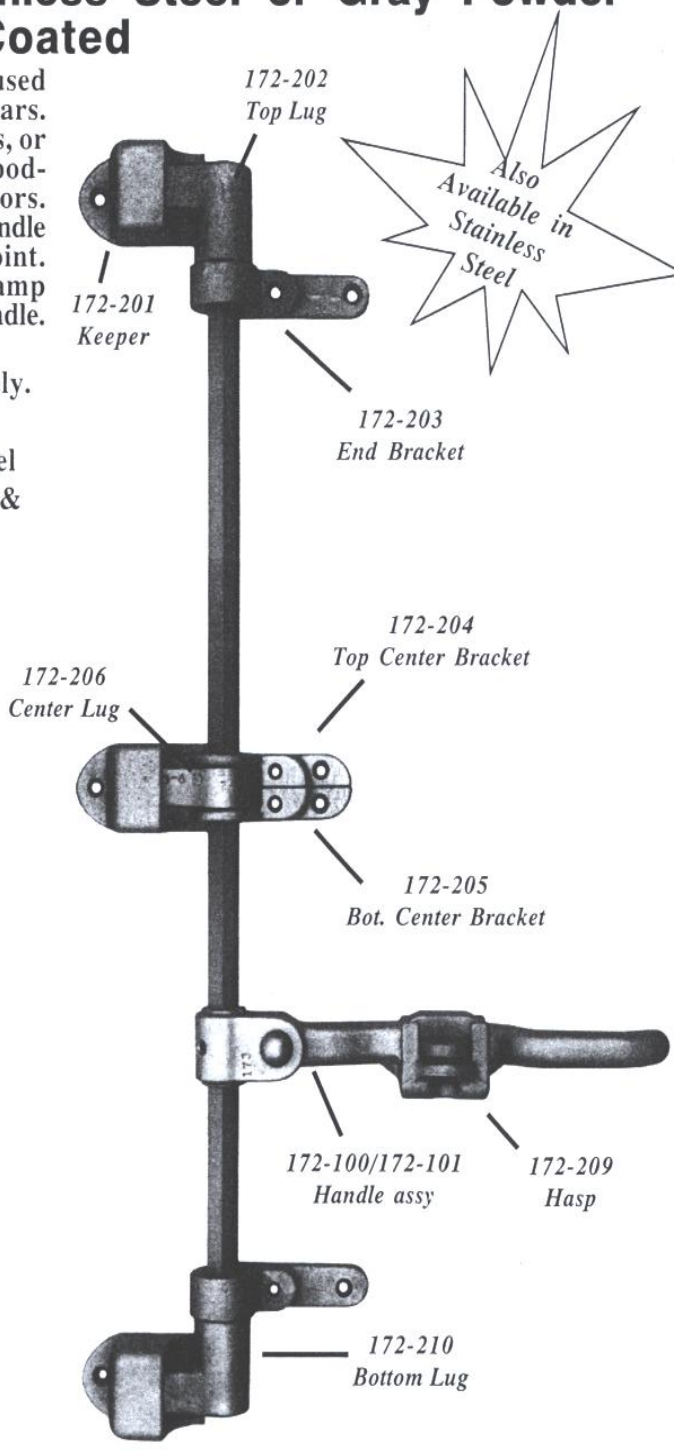

No. 173
3-Point Cam Lock
Weight 23 lbs.

CAM ACTION DOOR LOCK
TWO & THREE POINT LOCK

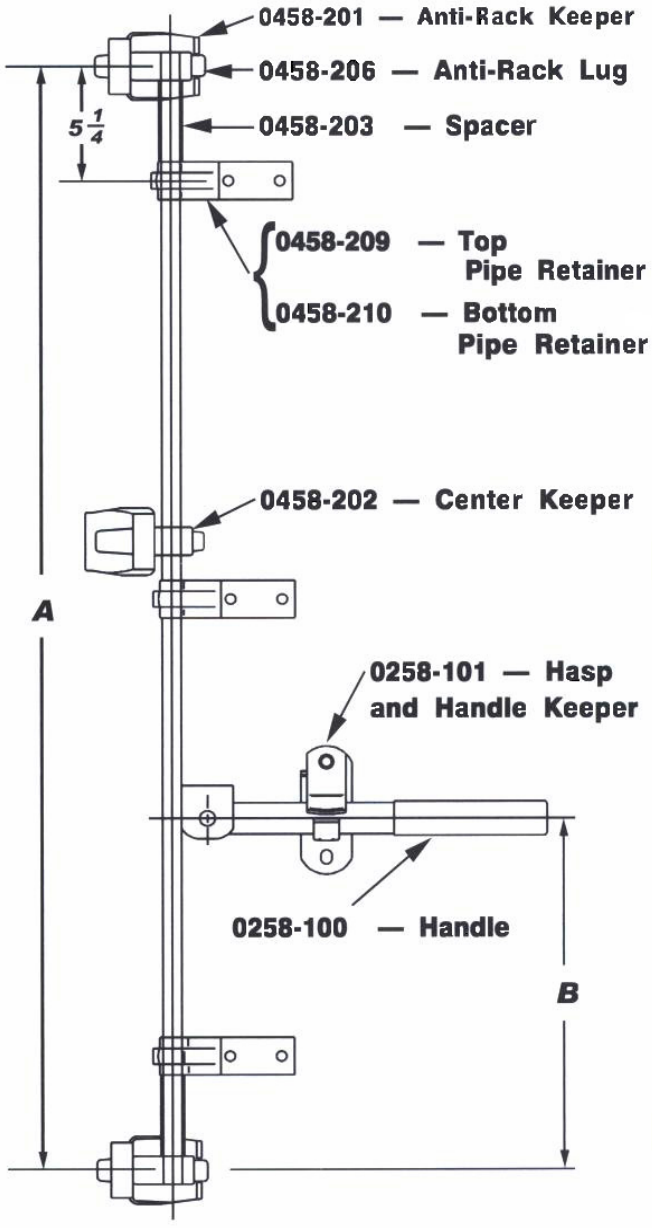

No. 458-008 Two Point Anti-Rack Lock (less pipe)

No. 458-007 Three Point Anti-Rack Lock (less pipe)

All steel zinc plated lock with black vinyl grip on handle. Handle riveted permanently for extra security. Mounting holes for 3/8" bolt universal for right or left hand — supplied less 3/4" pipe and padlock.

Lock can be special ordered as a weldment.

Weight: 4.5 lbs.

CAM ACTION DOOR LOCK

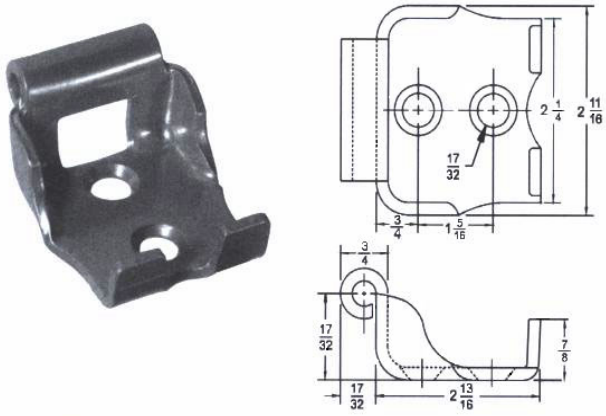

458-201 Anti-Rack Keeper

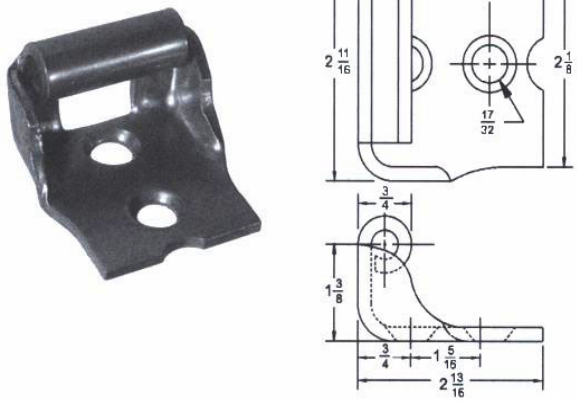

458-202 Center Keeper

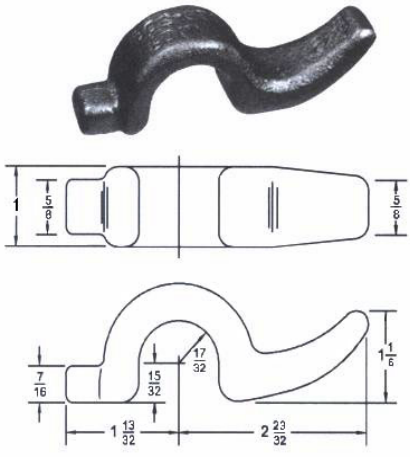

458-206 Anti-Rack Lug

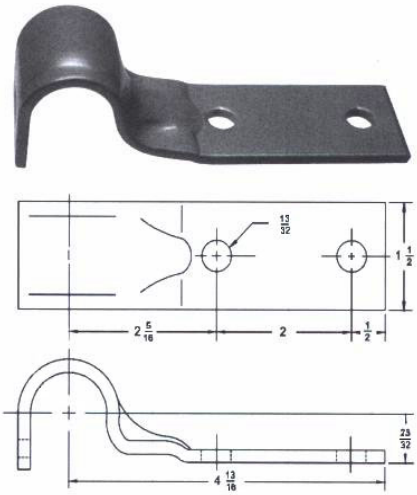

458-209 Top Pipe Retainer

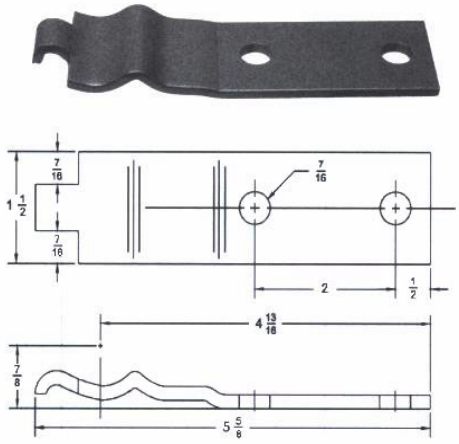

458-210 Bottom Pipe Retainer

Conponent Parts

458-201 Anti-Rack Keeper
458-202 Center Keeper
458-209 Top Pipe Retainer
458-210 Bottom Pipe Retainer
458-206 Anti-Rack Lug

Keepers and pipe retainers made of 10 ga. steel; lug made of cast malleable iron.

EMBOSSED STEEL HINGES

Manufactured from high quality steel. Embossed for greater strength. For use on trailers and truck bodies. Has wide bracket with three mounting holes. Three strap lengths available. Hinges supplied with non-removable pin for maximum security. Also available with removable pins. To order removable pins add the letter R to the catalog number. Example: 2008-R.

Specifications:
Bracket — 8 Ga. x 4-1/2" x 3" from center of pin
Strap — 8 Ga. x 2" x 8", 12" or 16" as shown below
Pin — 1/2" Dia. steel
1/8" Shim available — See below No. 2000 Shim

Also Available in Stainless

ALSO AVAILABLE IN .160 ALUMINUM & 10 GA. PLAIN OR POLISHED STAINLESS STEEL

No. 2008 / 2008-SS

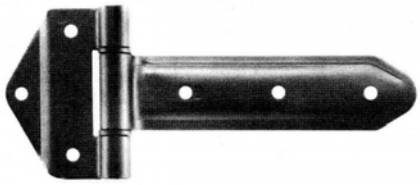

Flush — Strap 8" long
Mounting holes for 5/16" bolts
Finish — Steel - Zinc plated
Stainless - Plain or polished
Weight — 2 lbs.

No. 2012 / 2012-SS

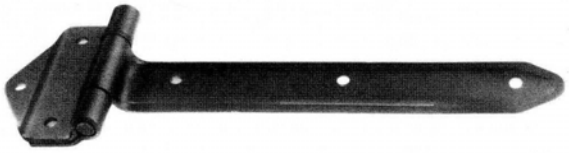

Flush — Strap 12" long
Mounting holes for 5/16" bolts
Finish — Steel - Zinc plated
Stainless - Plain or polished
Weight — 2-1/4 lbs.

No. 2016 / 2016-SS

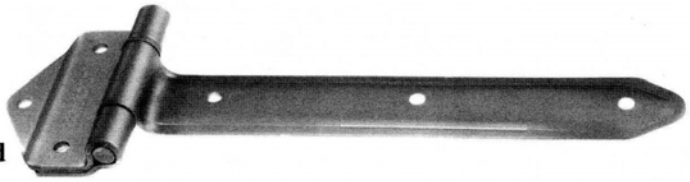

Flush — Strap 16" long
Mounting holes for 5/16" bolts
Finish — Steel - Zinc plated
Stainless - Plain or polished
Weight — 2-1/2 lbs.

SHIM
No. 2000

For use with 2000 series hinges with wide bracket when 1/8" offset is required.
Finish — Zinc Plated

EMBOSSED OVER THE SEAL HINGES

Designed to bridge door molding or door seal. Manufactured from high quality steel. Embossed for greater strength. Three strap lengths available. All hinges supplied with non-removable pin for maximum security. Also available with removable pins. To order removable pins add the letter R to the catalog number Example: 2108-R.

Specifications:
Bracket — 8 Ga. x 4-1/2" x 3" from center of pin
Strap — 8 Ga. x 2" x 8", 12" or 16" as shown below
Pin — 1/2 Dia. steel
1/8" Shim available — See below No. 2000 Shim
All mounting holes for 5/16" bolts.

ALSO AVAILABLE IN .160 ALUMINUM & 10 GA. PLAIN AND POLISHED STAINLESS STEEL

No. 2108 / 2108-SS

Flush — Strap 8" long
Finish — Steel - Zinc plated
Stainless - Plain or polished
Weight — 2 lbs.

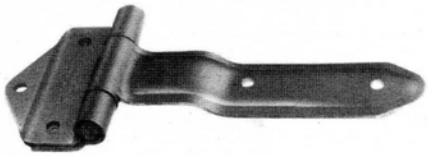

No. 2112 / 2112-SS

Flush — Strap 12" long
Finish — Steel - Zinc plated
Stainless - Plain or polished
Weight — 2-1/4 lbs.

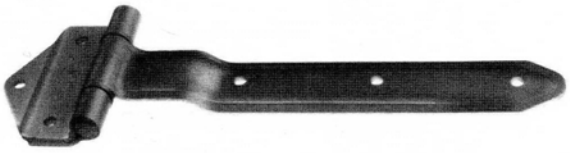

No. 2116 / 2116-SS

Flush — Strap 16" long
Finish — Steel - Zinc plated
Stainless - Plain or polished
Weight — 2-1/2 lbs.

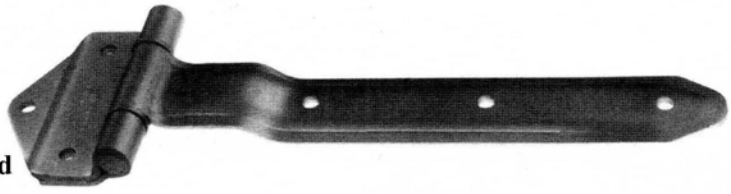

SHIM
No. 2000

For use with 2000 series hinges with wide bracket when 1/8" offset is required.
Finish — Zinc Plated

SQUARE CORNER HINGE WITH REVERSE BRACKET

Reverse bracket allows door to swing 270 degrees. Manufactured from high quality steel, embossed for greater strength. All hinges supplied with non-removable pin. Also available with removable pins. To order removable pins add the letter R to the catalog number. Example: 2208-R.

Specifications:

Bracket — 8 Ga. x 4-1/2" x 1-5/8" from center of pin
Strap — 8 Ga. x 2" x 8", 12" or 16" as shown below.
Pin — 1/2" Dia. steel
Finish — Steel - Zinc plated
Stainless - Plain or polished

ALSO AVAILABLE IN .160 ALUMINUM & 10 GA. PLAIN AND POLISHED STAINLESS STEEL

Also Available in Stainless Steel

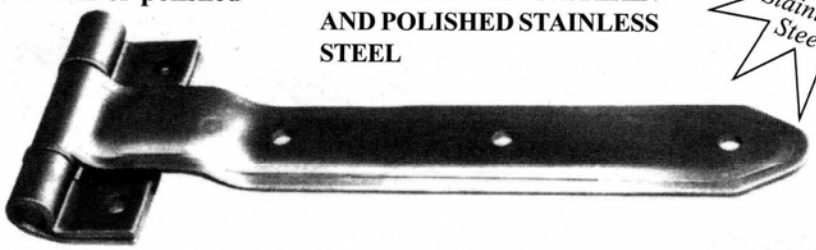

DIMENSIONAL DRAWINGS

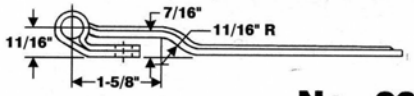

No. 2208 / 2208-SS

Wt.- 2 lbs.

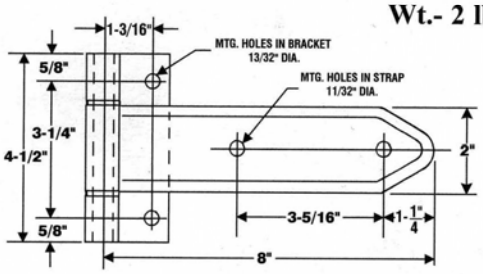

SHIM No. 2001

For use with all 2000 series hinges with a narrow bracket when 1/8" offset is required.

Finish — Zinc plated.

No. 2212 / 2212-SS

Wt.- 2 1/4 lbs.

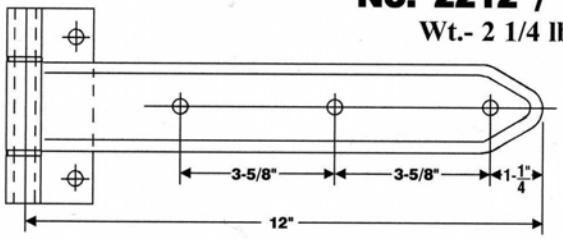

No. 2216 / 2216-SS

Wt.- 2 1/2 lbs.

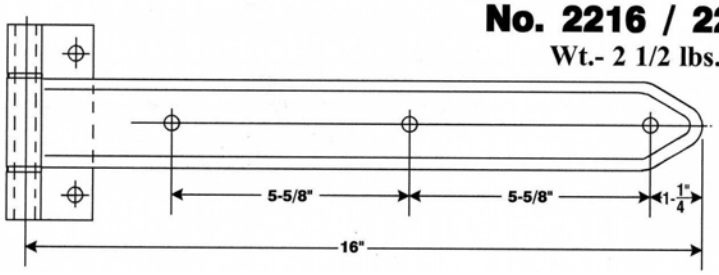

SIDE OR REAR DOOR HINGE

No. 118 Hinge with 8" strap

Features narrow bracket for mounting where space is limited. Supplied with 1/2" drive pin. (Removable pin also available).

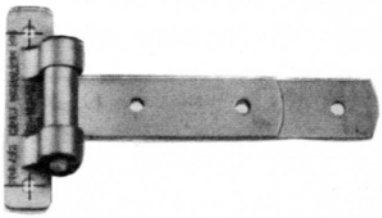

Specifications:

Bracket — Ductile iron
Strap —2 laminations of 8 ga. Steel. x 1-1/2" x 8" or 12"
Pin — 1/2" dia. x 2-7/8" steel
Furnished flush to 1/2" offset. (Specify offset required)
Finish — Powder coated bracket and zinc plated leaf
No. 118 — Weight 2 lbs.

No. 2322 RADIUS CORNER HINGE

This 1" radius corner hinge has embossed steel strap and Malleable iron bracket. Has 270 degree swing to allow full opening of rear door.

Specifications:

Bracket — Malleable iron
Strap — 8 ga. steel x 2" x 11-7/8"
Finish — Zinc plated
Weight — 2 1/2 lbs.

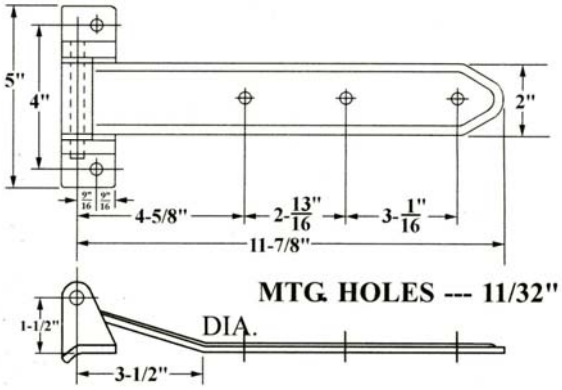

MICKEY SIDE DOOR HINGE

Part P2408AS 8" Aluminum with Stainless Steel Pin

NARROW BRACKET OVER THE SEAL HINGES

Designed to bridge door molding or door seal. Manufactured from high quality steel. Strap is embossed for greater strength. Features a narrow bracket for mounting where space is limited. Supplied with non-removable pin for maximum security. Also available with removable pin. To order removable pin add the letter R to the catalog number. Example: 2508-R.

Specifications:

Bracket — 8 Ga. x 4-1/2″ x 1-5/8″ from center of pin

Strap — 8 Ga. x 2″ x 8″, 12″ or 16″ as shown below.

Pin — 1/2″ Dia. steel

Finish — Steel - Zinc plated
Stainless - Plain or polished

ALSO AVAILABLE IN .160 ALUMINUM & 10 GA. PLAIN AND POLISHED STAINLESS STEEL

Also Available in Stainless Steel

DIMENSIONAL DRAWINGS

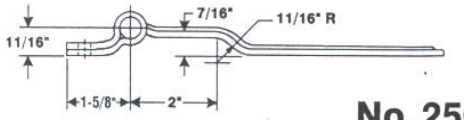

No. 2508 / 2508-SS
Wt. 2 lbs.

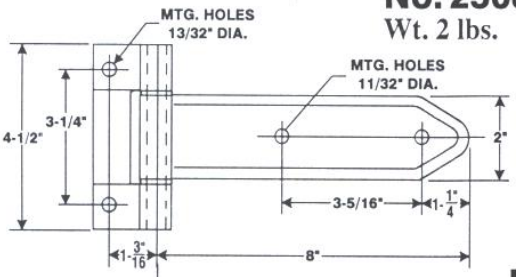

SHIM
No. 2001

For use with all 2000 series hinges with a narrow bracket when 1/8″ offset is required.

Finish — Zinc plated.

No. 2512 / 2512-S
Wt. 2-1/4 lbs.

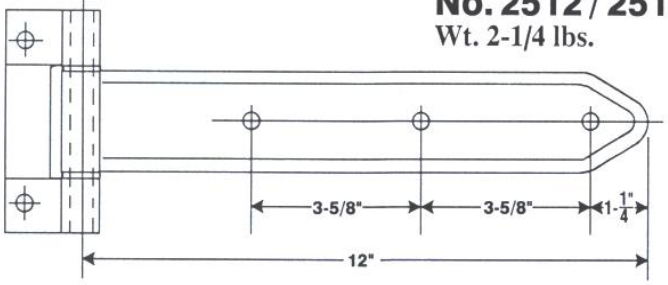

No. 2516 / 2516-SS
Wt. 2-1/2 lbs.

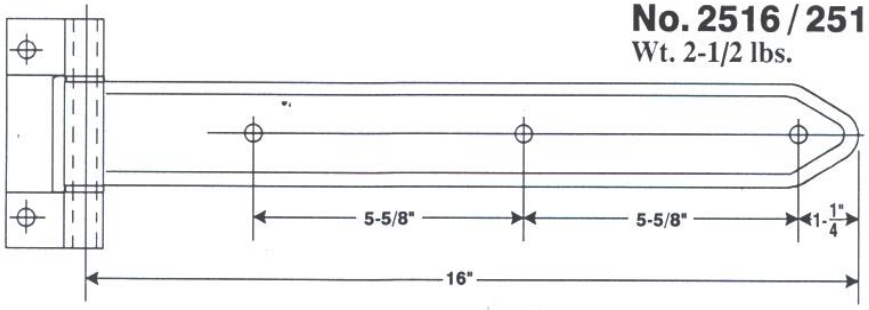

NARROW BRACKET SIDE & REAR DOOR HINGES

Manufactured from high quality steel. Strap is embossed for greater strength. Same basic hinge as Polar 2000 Series but features a narrow bracket for mounting where space is limited.

Specifications:

Bracket — 8 Ga. x 4-1/2″ x 1-5/8″ from center of pin

Strap — 8 Ga. x 2″ x 8″, 12″ or 16″ as shown below.

Pin — 1/2″ Dia. steel

Finish — Steel - Zinc plated

Stainless - Plain or polished

Also Available in Stainless Steel

ALSO AVAILABLE IN .160 ALUMINUM & 10 GA. PLAIN AND POLISHED STAINLESS STEEL

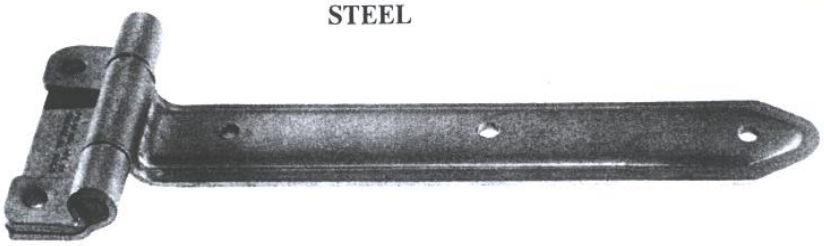

DIMENSIONAL DRAWINGS

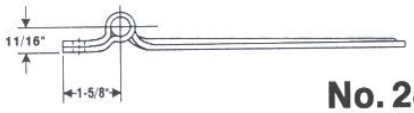

No. 2408 / 2408-SS

Wt.- 2 lbs.

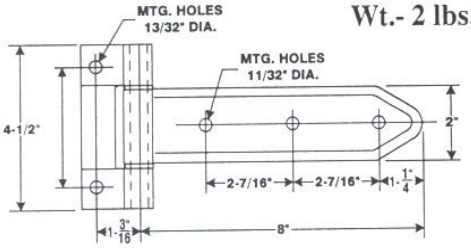

SHIM No. 2001

For use with all 2000 series hinges with a narrow bracket when 1/8″ offset is required.

Finish — Zinc plated.

No. 2412 / 2412-SS

Wt. 2-1/4 lbs.

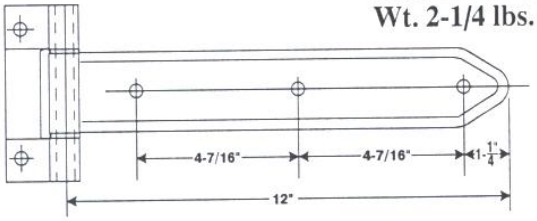

No. 2416 / 2416-SS

Wt 2-1/2 llbs.

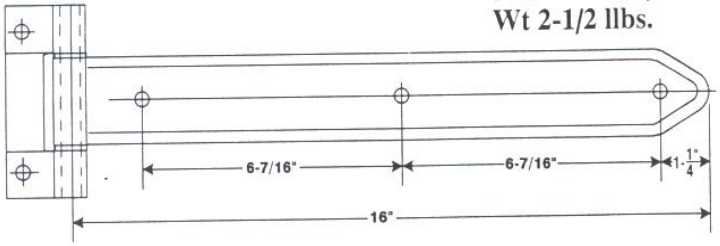

SQUARE CORNER HINGE

No. 4040

Square corner rear door hinge. All steel, this hinge allows door to swing 270° for full opening. Supplied with non-removable pin. (Removable pin also available). Universal for right or left hand doors. Available Flush to 1/2" Offset.

Specifications:

Bracket:	**8 ga x 5" x 4-1/2" Wide**
Strap:	**8 ga x 1-3/4" x 12-1/8" Long**
Pin:	**1/2" Dia.**
Finish:	**Zinc plated**
Weight:	**3-3/4 lbs.**

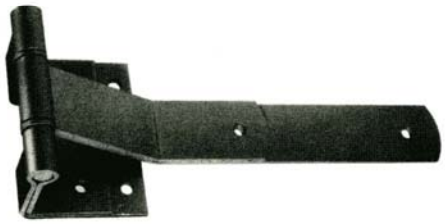

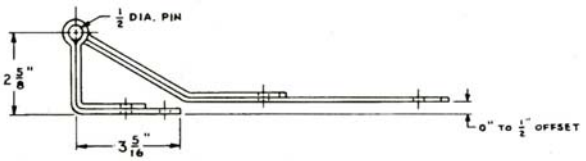

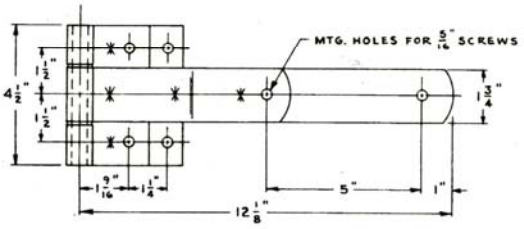

Part 109
Chrome Plated Die-Cast Hinge

For refrigerator doors, vent doors, cabinets, etc. Furnished with a stainless steel pin, nylon bushings and thrust bearings provide smooth operation. Pin may be reversed to make hinge right or left hand. Also available with an alternate hole patterns.

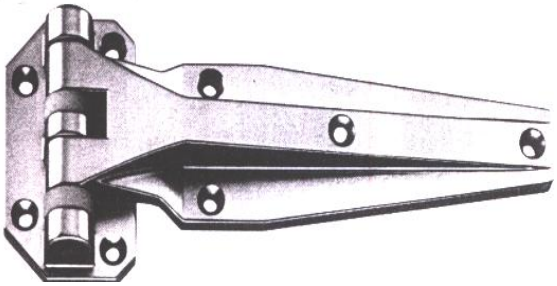

118-001
1-1/2” x 12” Offset Hinge for A.M. Haire Side Door
Powder Coated Grey

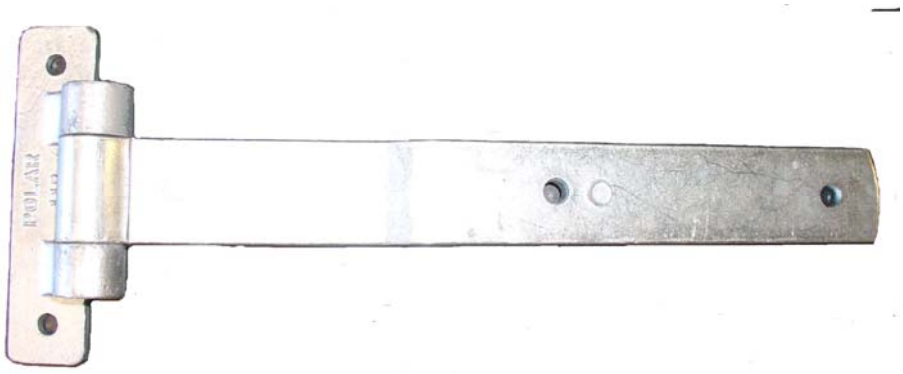

Part 7014/AMH
1-1/2” x 12” Offset Hinge for A.M. Haire Rear Door
Powder Coated Grey

Part 9
Polar Hold Tite Door Holder

Zinc plated with a 4-inch hook

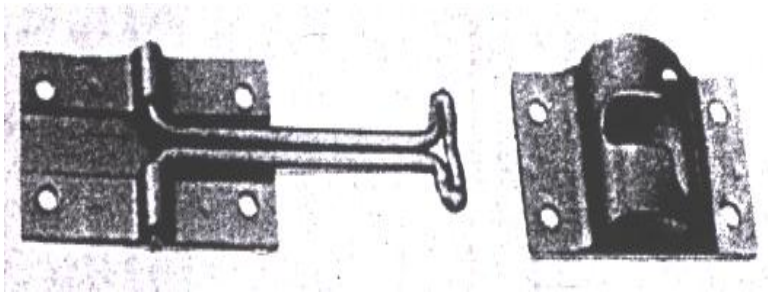

Part 900
Polar Folding Assist

Combination assist. Designed for use on trucks, truck bodies, buses, trailers, and industrial use. Standard All malleable Iron. Spring holds assist in open or close position without rattle.

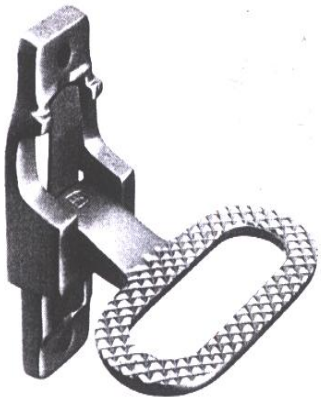

Part 905 (Zinc) **& 905C** (Chrome)
Eberhard Folding Assist

Large folding step can be used as a step or handhold. Made out of malleable iron for greater strength, it will sustain a maximum vertical static load of 500 lbs. Available in chrome or zinc finish. Step features a serrated surface to help prevent skidding, stainless steel spring which allows step to be folded when not in use, opening is large enough for large gloved hands, and meets requirements of the Federal Highway Administration

SOLID ZINC DIE-CAST HANDLES

No. 815
Heavy duty solid zinc die-cast handle. 8" overall length. 2" wide at base with 5" grab.
Finish — Bright chrome finish.
Weight — .9 lbs

No.
Same as above.
Finish—
Weight — .9 lbs

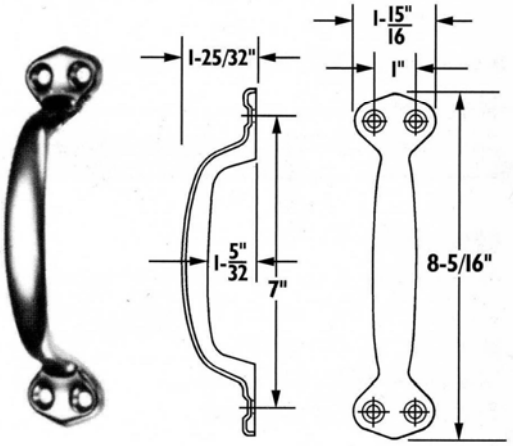

ASSIST HANDLE

PART NUMBER	DESCRIPTION
GH12A	12” Aluminum
GH18A	18” Aluminum
GH24A	24” Aluminum
819C	16” Steel Chrome
0624-A	30”X 5/8 Aluminum Round Stock

MULTI-PURPOSE VENTILATORS

No. 20
Aluminum vent with closure

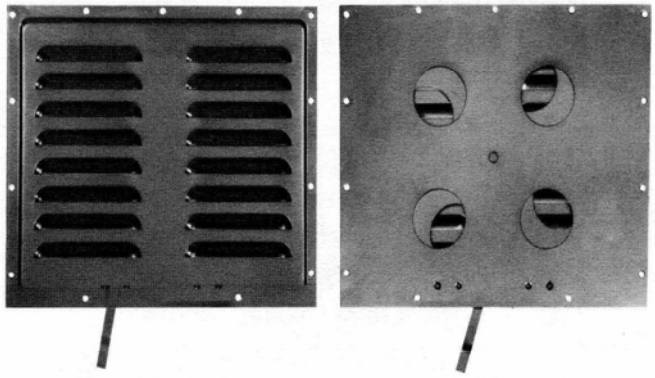

This popular aluminum ventilator is supplied with an internal closure to open and close the vent. Just slide the lever to open & close vent.

Back has four 2" diameter holes to allow flow of air.

Can be used on cargo trailers, horse trailers and dry freight trailers.

Front & back are aluminum. Insert is zinc plated steel.

Weight — 1-1/2 lbs.

Shipped 25 per carton.

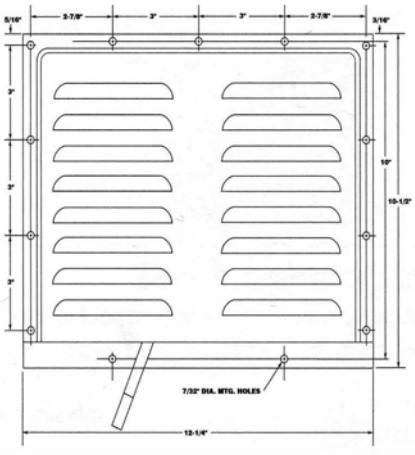

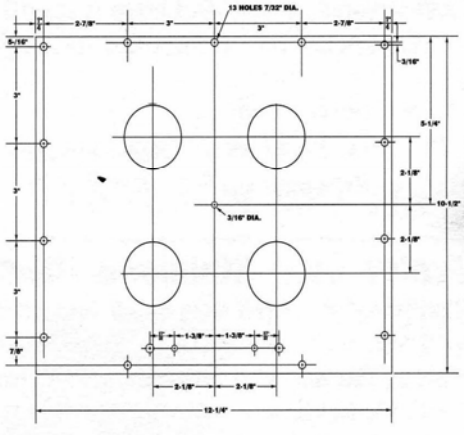

Nash Style Spare Tire Carrier (Standard Mount)

Features

- Heavy-duty, 12 gauge, formed steel construction
- Black primer finish
- Accommodates tires up to 11.00" x 22.00" and 12.24.5
- Universal mounting
- Additional warning decal sent at customer's request
- Optional Nash style adapter mounting brackets available, part #981-00055, page 136

Dimension Diagram

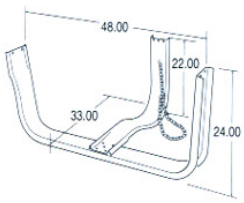

Specifications

Part #	Weight (lbs.)	Pop. Code	Description	Cross Reference
TC1	32.03	A	Unassembled bulk kit	Nash #300002

Belly Box Latch Assembly & Hardware

Features

- Stainless steel construction
- Built in anti-theft capability
- Latch assembly bulk kit includes latch, striker plate, keeper bracket and female door holder
- Spring assisted pressure closing feature
- Rubber hold back included
- Rivet design, no longer welded

Dimension Diagram

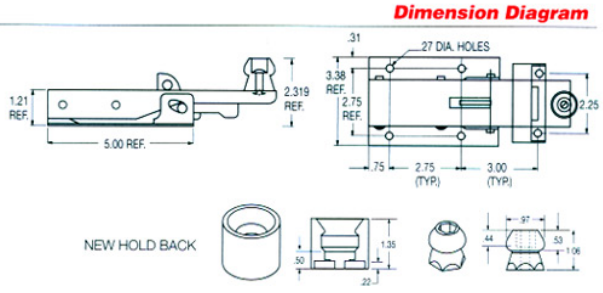

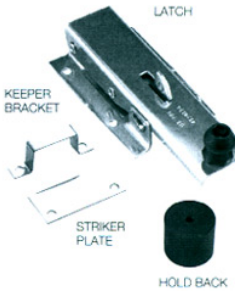

Specifications

Part #	Weight (lbs.)	Pop. Code	Description	Cross Reference
10-300SS	1.09	A	Latch Assembly Bulk Kit	Penz

Part FF/MOR/GM
Fuel Filler Neck Housing, Morgan GMC Round

Part FF/SUP/GM
Fuel Filler Neck Housing, Supreme GM Square

Part FF/SUP/FORD
Fuel Filler Neck Housing, Supreme Ford Square

Flooring

Aluminum Flooring — Dry Freight

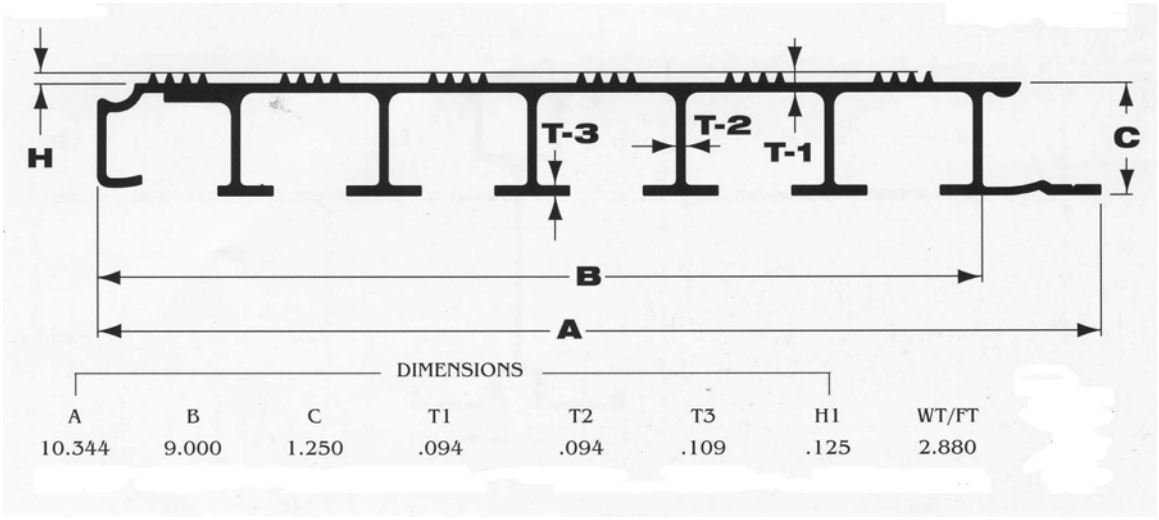

DIMENSIONS

A	B	C	T1	T2	T3	H1	WT/FT
10.344	9.000	1.250	.094	.094	.109	.125	2.880

Aluminum Flooring — Refrigerated Freight

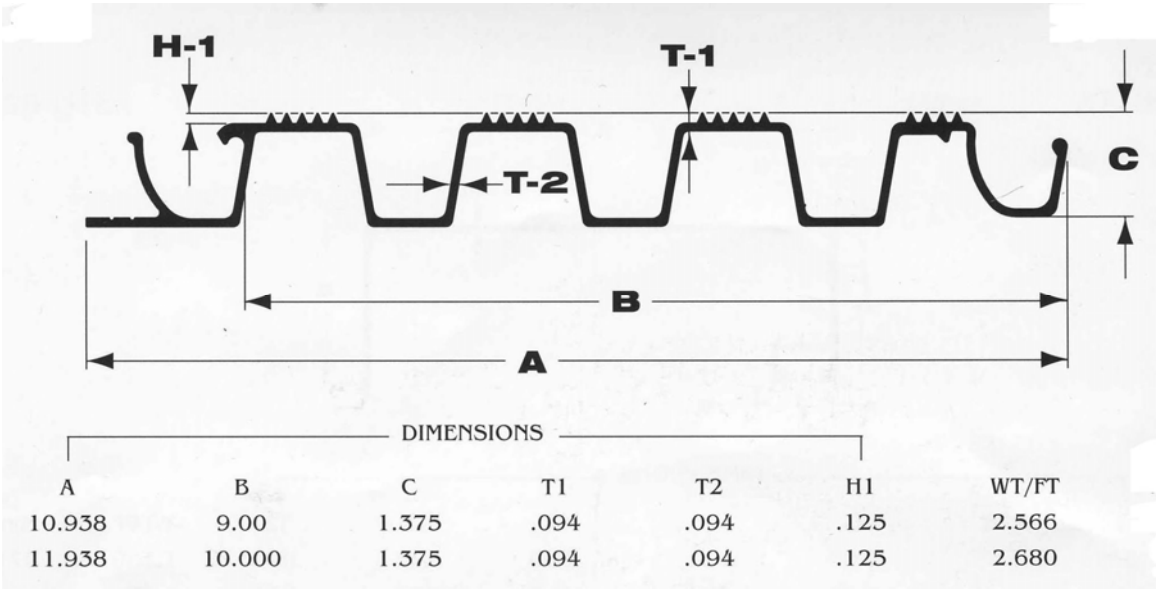

DIMENSIONS

A	B	C	T1	T2	H1	WT/FT
10.938	9.00	1.375	.094	.094	.125	2.566
11.938	10.000	1.375	.094	.094	.125	2.680

Ramps & Parts

Make Your Own Ramps.

Part 2189– Standard Side Rail

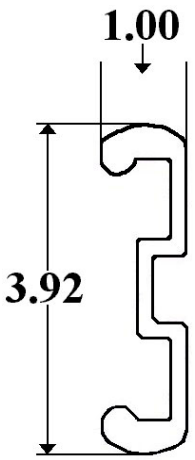

Part 2438– H.D. Extra Lo Profile Side Rail *Special Order*

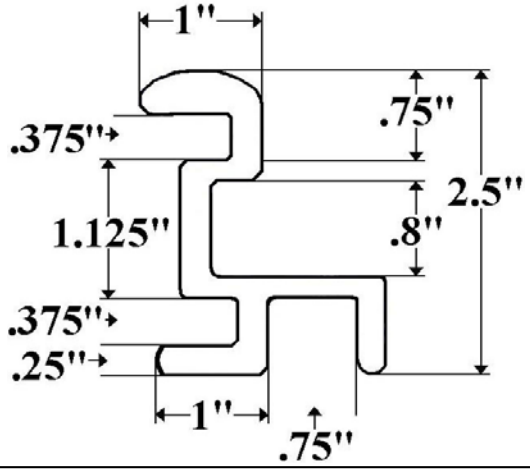

Part 2331– Lo Profile Side Rail

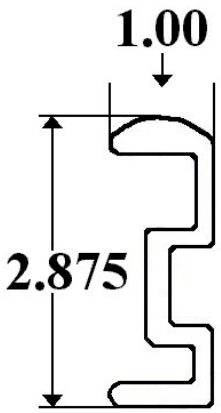

Part 2190– Head Board

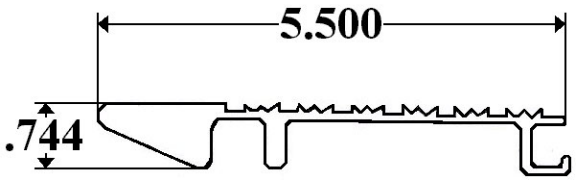

Part 2191– Center Board

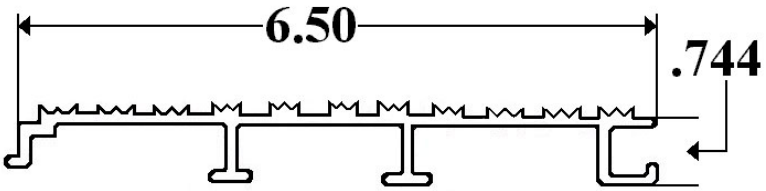

Part 2192– Toe Board

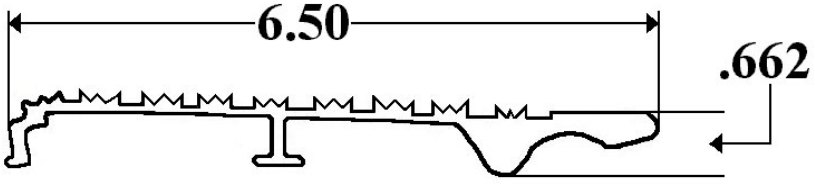

Part 17– Handle

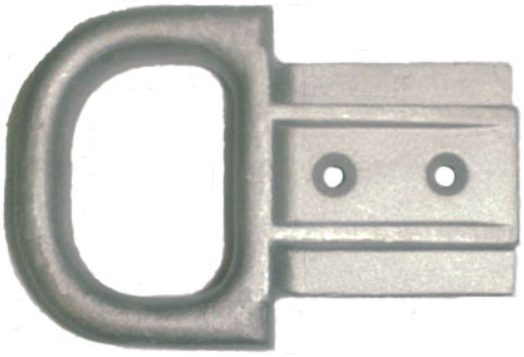

Part 39180– Ramp Latch

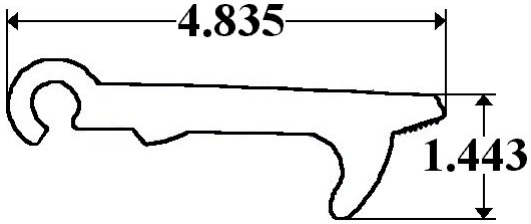

Uses Bushing MFI0608-12

Part 04894– Handle Left

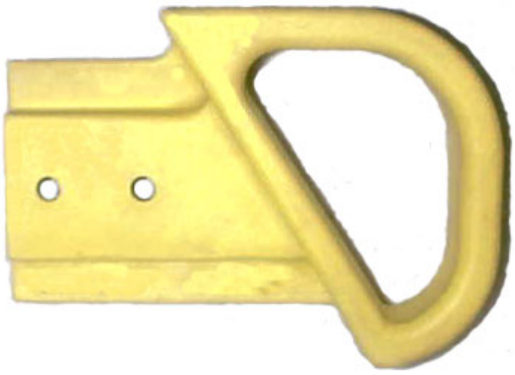

Available in black only

Part 04895– Handle Right

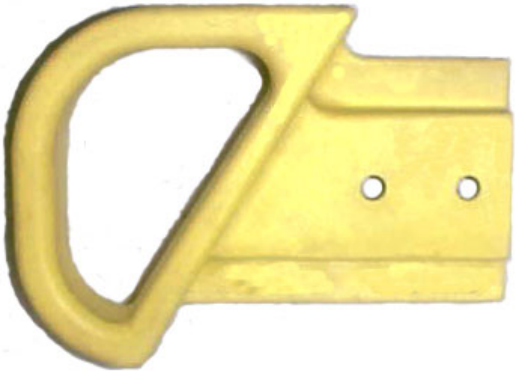

Available in black only

Part 39189– Hook

Part MFI0608-12– Bushing

Used on 39180 Ramp Latch

Part LS7811- Spring

Part 2175– Pull Strap

Part RA4– Ramp Roller *Assembly*

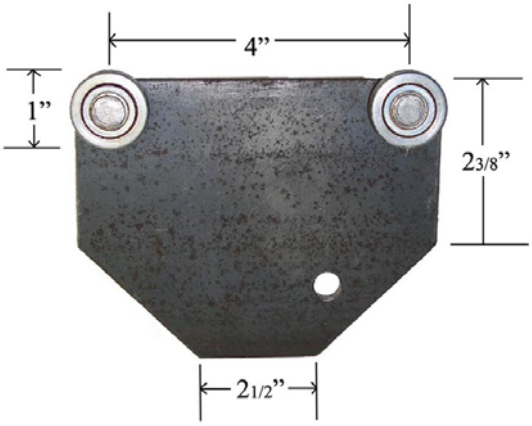

RT– Track

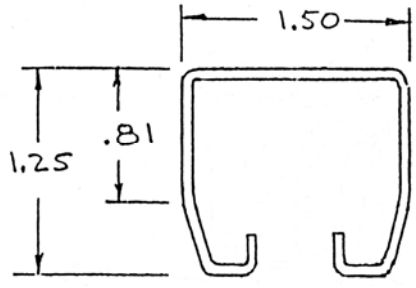

16 Guage Galvanized
RT/12 (12’)
RT/16 (16’)

RT Morgan

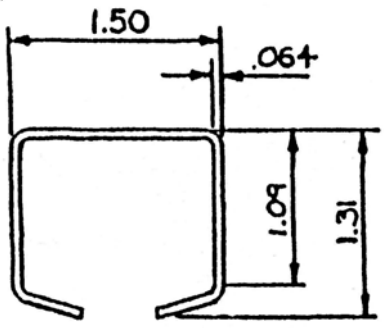

16 Guage Galvanized
RT/12M (12’)
RT/16M (16’)

Ramp Wheels

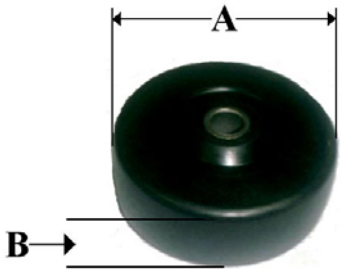

Part #	A	B
3-106	3”	1.25”
3-1/2-106	3.5”	1.25”

Part 4428-01– Sleeve for Ramp Wheels

Low Profile Aluminum Ramp

Standard Aluminum Ramp

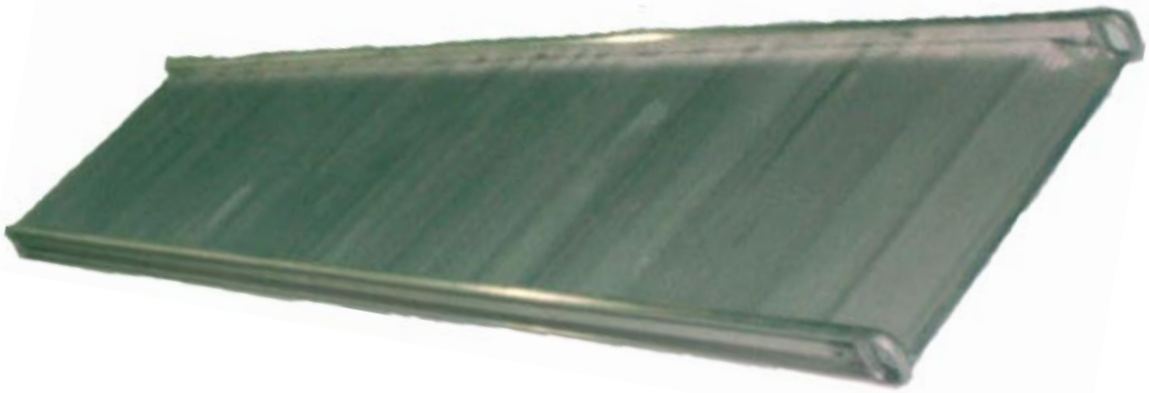

Stock Ramps Lo-Profile or Standard

Lo-Pro	**Standard**
8’ X 25.5” or 29.5” width *O.D.*	8’ X 25.5” or 29.5” width *O.D.*
10’ X 25.5” or 29.5” width *O.D.*	10’ X 25.5” or 29.5” width *O.D.*
12’ X 25.5” or 29.5” width *O.D.*	12’ X 25.5” or 29.5” width *O.D.*
14’ X 25.5” or 29.5” width *O.D.*	14’ X 25.5” or 29.5” width *O.D.*
	16’ X 25.5” or 29.5” width *O.D.*

O.D.- Outside Diameter

Lights, Mirrors, Reflectors

7 GAUGE STEEL LIGHT MODULES

2 LIGHT MODULES #781-1 NOT PAINTED- NO LIGHTS
24” HIGH X 3-3/4” WIDE X 3-1/2” DEEP

3 LIGHT MODULES #782-1 NOT PAINTED- NO LIGHTS.
29” HIGH X 3-3/4” WIDE X 3-1/2” DEEP

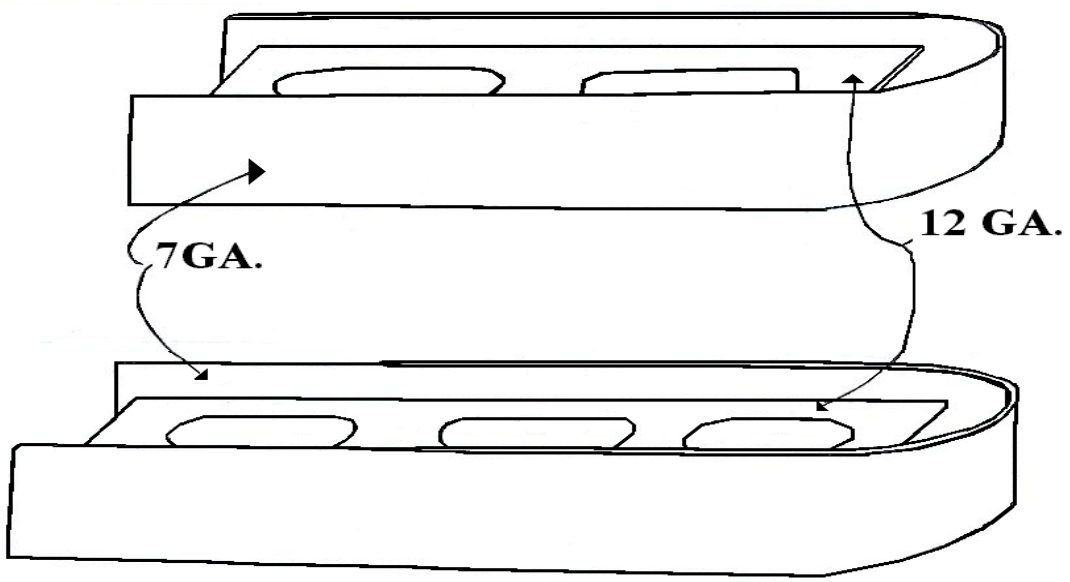

LIGHT KITS

#781-K TWO LIGHT MODULE KIT, COMPLETE WITH 2 #781-1 STEEL MODULES, 4 LIGHTS WITH RUBBER GROMMETS, PLUGS & 2 RED REFLECTORS.

#782-K THREE LIGHT MODULE KIT, COMPLETE WITH 2 #782-1 STEEL MODULES, 6 LIGHTS WITH RUBBER GROMMETS, PLUGS & 2 RED REFLECTORS.

ALSO AVAILABLE IN LED:

A– AMBER
R– RED
W– WHITE

Parts VSM1211R, VSM1211A, VSM1211W- Marker Light

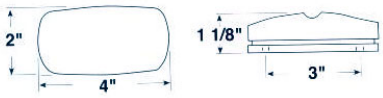

Parts 130R, 130A- Marker Light

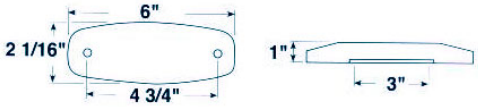

Part 400- License Plate Light

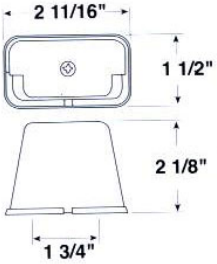

Part 421-09- Light Holder

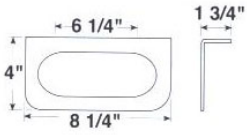

Part V423R-KR- LED Stop, Turn, & Tail

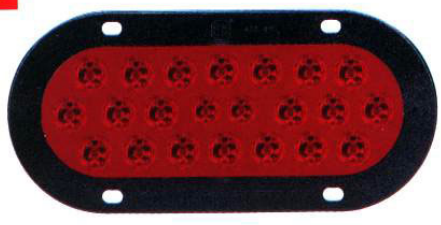

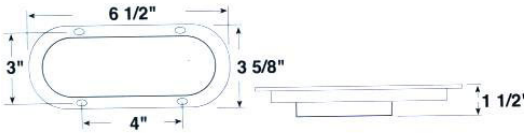

Part 426-09- Light Holder

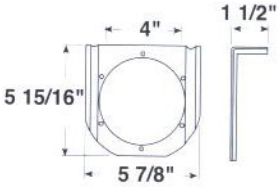

Part 438- License Plate Light

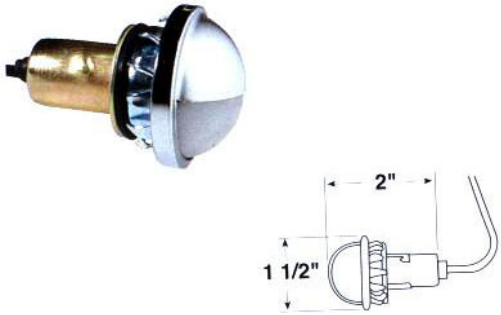

Part 465K- Reflective Tape

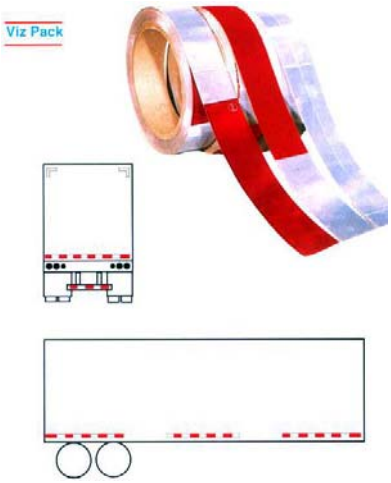

Parts 489 A&R, 491 A&R- Wide Angle Reflectors

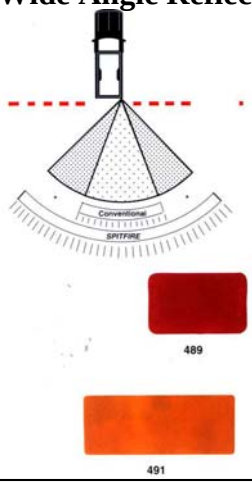

Part 608X0- 8” Stainless Convex Mirror

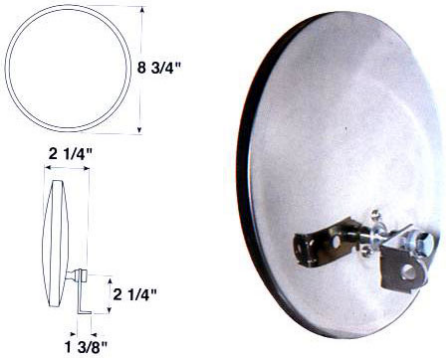

Part 615- West Coast Mirror

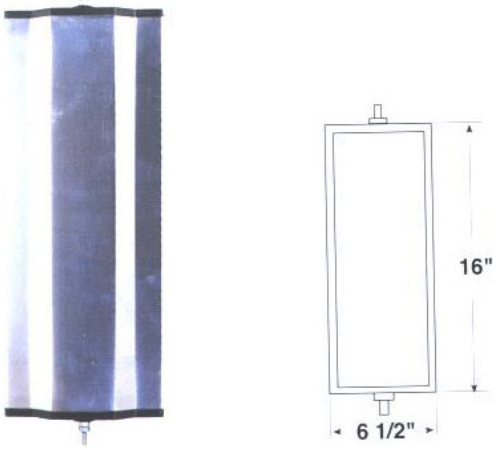

Part 655X- 6” Stainless Convex Mirror

Part 780- Back Up Alarm 97db

Part M389- Interior Dome Light

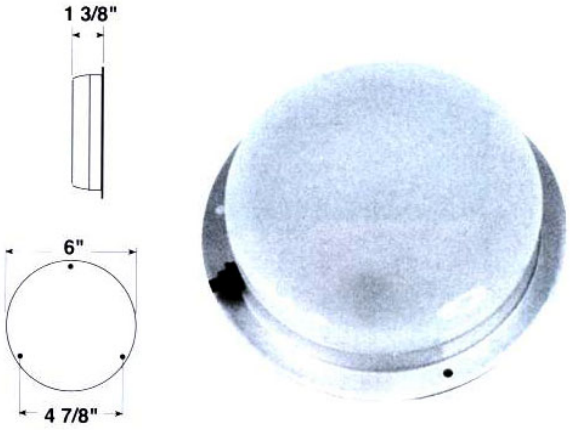

Part V160 KA, V160 KR- LED Clearance Marker Light

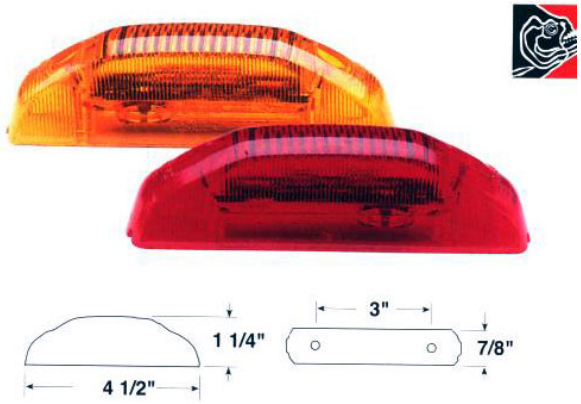

Part V435- License Plate Light

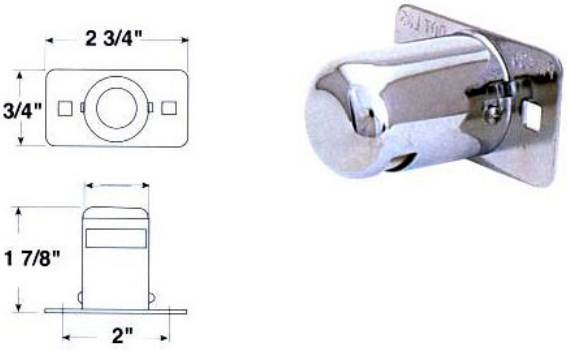

Part V436SX- License Plate Light

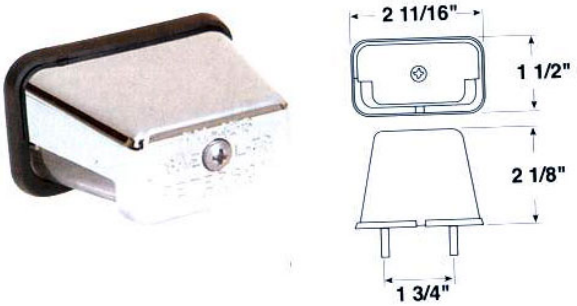

Chrome

Part V445- Universal Stop & Tail

Part V602- Stick-On Convex Mirror

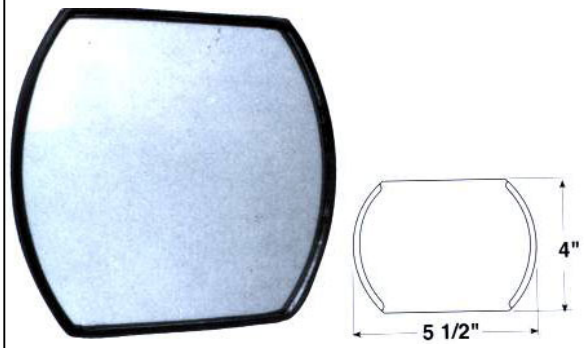

Parts VSM4054R, VSM4054A, VSM4054W- Lights Kits

Parts VSM6054R, VSM6054A, VSM6054W- Light Kits

Part PM108A (Amber)
Part PM108R (Red)
Marker Light

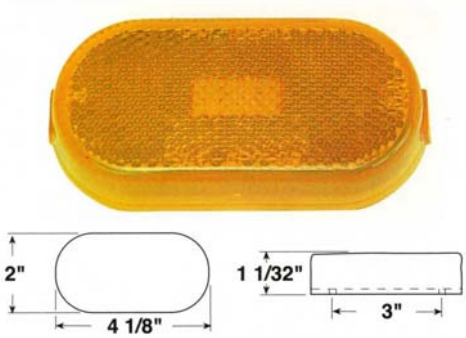

Part VSM1030A & R-
2" Sealed Lamp

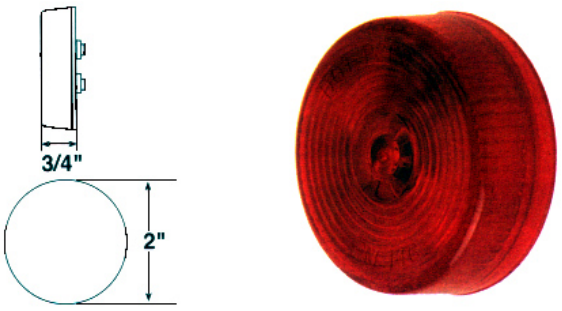

Part VSM9239-
Mount Kit for 2" Sealed Lamp

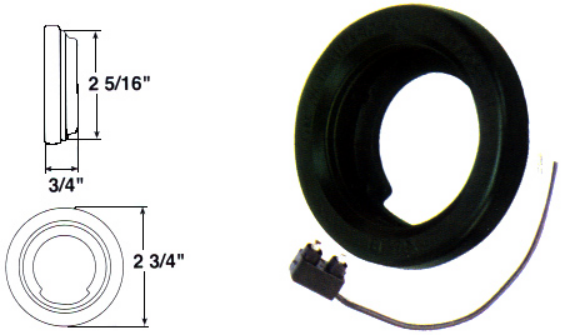

Parts M508- Rubber Work Light

We stock a full line of lights, mirrors & reflectors.

Lift Gate Parts

Part AMF3330- *New Style* Drain Valve

Part AMT0097- Motor 9 Spline, Clockwise Rotation

Part APL2250- Starter Switch

Part APL2251- Canister Switch

Part APL3000- Starter Solenoid

Part APL3020- Upright Solenoid, Bakelight Case

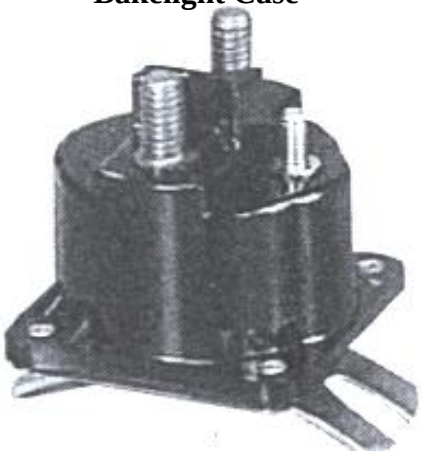

Part APL3365- Drain Solenoid Kit

Part APL9012 (120 AMP), APL9015 (150AMP)- Circuit Breaker

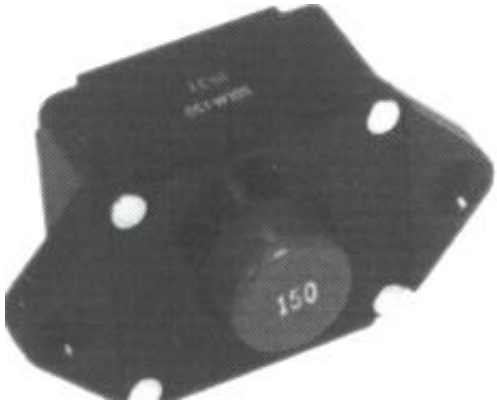

Part APP0100- Manual Power Pack

Part APP0200- Electric Power Pack

Part APP0250- Electric Power Pack

Part BMT0027- Motor Counter Clockwise

Part BPL2713- Push Button Switch

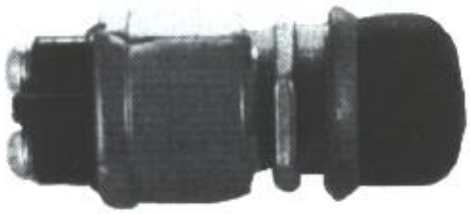

Part BPL2717- Wired Push Button Control Box (Gray)

Part BPL2771- Wired Weatherproof Push Button Box (Orange)

Part DB1 -- Dock Bumper

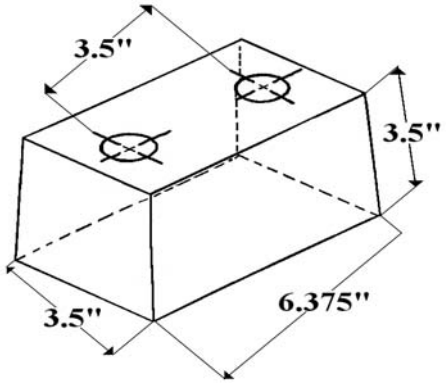

Maxon OEM # 281280-01

Part DB12

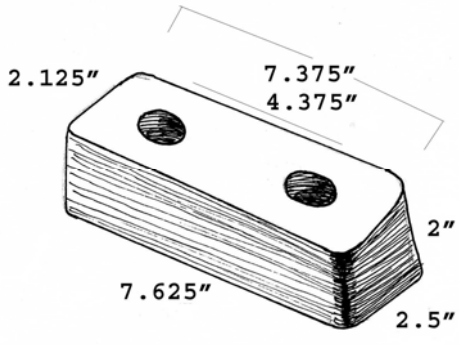

Anthony Liftgate Parts OEM# ATU126

Part WPL2745- Waltco Superswitch

Tools & Equipment

3/16” Rivet Guns

1/4” Rivet Guns

1/4 -3/8 &1/2” Air Ratchets

1/4 -3/8 &1/2” Reversible Air Drills

Air Hammers

D.A. Air Sanders

3/4 & 1” Impact Wrenches

High Speed Sanders

Angle Polishers &Grinders

1/4” Screw Drivers

Air Shears

Index

Aluminum Angles	214	Plastic Corner Caps	181, 186
Aluminum Castings	170-194	Post- Steel & Aluminum	154-160
Aluminum Extrusions	195-218	Quick References	4-135
Aluminum Sheet	275	Radius Post & Panels	219-227
Apitong Base & Slats	276	Ramps & Parts	297-302
Back Up Alarms	307	Rivets	264-266
Bottom Rails	145-150	Roll Up Doors	250-258
Bumpers	269-272	Roof Bows	164-169
Camtainer Nuts & Bolts	267-268	Roofing Aluminum	274
Diamond Plate	275	Roofing Translucent	274
Door Locks	280-285	Roof Radius	219-227
E-Track	236	Rope Rings	279
Fasteners	262-268	Rubber Dock Bumpers	259-261
Fiberglass Materials	277-278	Rub Rails & Caps	151-153
Fiberglass Nose Caps	244-249	Scuff Liner Aluminum	218
Folding Steps	293	Scuff Liner Steel	243
FRP	277	Sealants	274
FRP Splice	277	Steel Parts	228-243
Grab Handles	293-294	Tape	249
Hinges	100, 113, 286-292	Tek Screws	276
J-Molding	196	Tie Backs	293
Lift Gate Parts	310-313	Tie Bars & Rods	263
Lights	303-309	Tire Carrier	295
Light Boxes	234, 304	T-Nuts & Bolts	267-268
Logistic Post	236	Tools & Equipment	314-316
Mono-Bolts	266	Top Rails	136-144
Mirrors	306, 308	U-Bolts	263
Nylon Rivets	264		

Copyright © 2006 by Richard Lebowitz

Published by
RICHARD LEBOWITZ
P.O. BOX 91
KEARNY, NJ 07032
www.fleetpartsonline.com

All rights reserved, including the right to reproduce this book or portions thereof in any form or by any means, electronic or mechanical, including photocopying, recording, or by any information and retrieval system, without permission in writing from the publisher. All inquiries should be addressed to Richard Lebowitz P.O. Box 91 Kearny, NJ 07032.

Printed in the United States of America

10 9 8 7 6 5 4 3 2 1

THIRD EDITION

Library of Congress Cataloging-in-Publication Data
Lebowitz, Richard., 2006
Fleet Parts Catalog
TX5-520-270